Directional seated valve type NBVP 16

Product documentation

Operating pressure p_{max}:	400 bar
Flow rate Q_{max}:	20 l/min

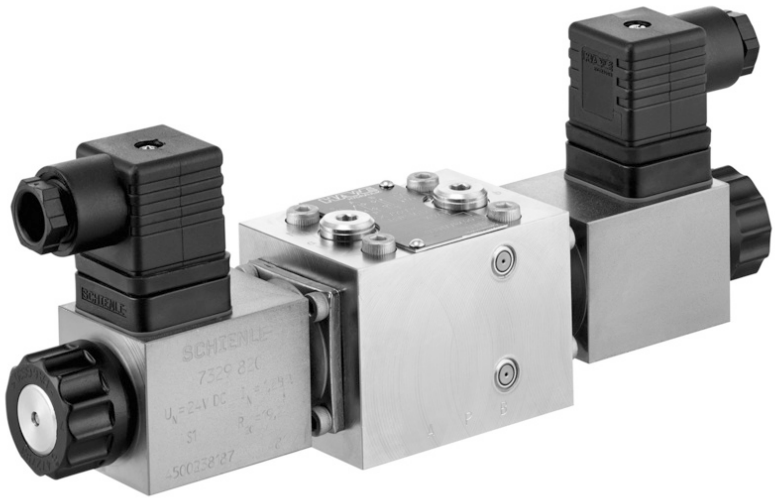

D 7765 N
05-2026-1.3 en

HAWE HYDRAULIK

© by HAWE Hydraulik SE.
The reproduction and distribution of this document, as well as the use and communication of its contents to others without explicit authorization, is prohibited.
Offenders will be held liable for the payment of damages.
All rights reserved in the event of patent or utility model applications.
Brand names, product names and trademarks are not specifically indicated. In particular with regard to registered and protected names and trademarks, usage is subject to legal provisions.
HAWE Hydraulik respects these legal provisions in all cases.
HAWE Hydraulik cannot provide individual guarantees that the stated circuits or procedures (including in part) are not subject to the intellectual property rights of third parties.
Printing date / document generated on: 2026-06-01

Table of Contents

1 Overview of directional seated valve type NBVP ... 5

2 Available versions ... 6
2.1 Basic type and size ... 6
2.2 Circuit symbol ... 7
2.2.1 Circuit symbols, standard ... 7
2.2.2 Circuit symbols, 4/4-way directional seated valves ... 11
2.2.3 Circuit symbols with inductive switching position monitoring ... 14
2.2.4 Circuit symbols with contact switch for switching position monitoring ... 16
2.3 Additional elements at port P or P1 and P2 ... 19
2.4 Additional elements at port A and/or B ... 21
2.5 Pressure switches and/or pressure gauges at the ports MA and/or MB ... 22
2.6 Additional elements at port T ... 23
2.7 Actuations ... 24
2.7.1 Electrical actuations ... 24
2.7.2 Manual override ... 26
2.7.3 Alternative actuations ... 27

3 Parameters ... 29
3.1 General data ... 29
3.2 Pressure and volumetric flow ... 30
3.3 Weight ... 31
3.4 Characteristic lines ... 33
3.5 Electrical data ... 35
3.5.1 Electrical actuation ... 35
3.5.2 Electrical data for contact switch ... 39
3.6 Alternative actuations ... 41

4 Dimensions ... 42
4.1 Hole pattern of the base plate ... 42
4.2 Valve part ... 43
4.3 Actuating elements ... 52
4.3.1 Electrical actuations ... 52
4.3.1.1 Actuation “dimension diagram A” ... 52
4.3.1.2 Actuation “dimension diagram B” ... 53
4.3.1.3 Actuation “dimension diagram C” ... 54
4.3.1.4 Actuation “dimension diagram D” ... 55
4.3.1.5 Actuation “dimension diagram E” ... 56
4.3.1.6 Actuation “dimension diagram F” ... 57
4.3.1.7 Manual override ... 58
4.3.2 Alternative actuations ... 59
4.4 Pressure switches and pressure gauges ... 62
4.5 Contact switch and inductive position monitoring ... 63
4.6 Single connection block ... 64

5 Installation, operation and maintenance information ... 65
5.1 Intended use ... 65
5.2 Assembly information ... 65
5.3 Operating instructions ... 65
5.4 Maintenance information ... 66

6 Other information 67
6.1 Accessories, spare and individual parts 67

1 Overview of directional seated valve type NBVP

Directional seated valves are a type of directional valve. Their function is to direct the flow of hydraulic medium in certain directions, therefore connecting the relevant connections, or shutting off the flow with zero leakage. By this means they control the movement of the actuators in a hydraulic system.

The type NBVP is a manifold mounting valve with standard connection pattern nominal size NG 6. 2/2-, 3/2-, 3/3-, 4/2-, 4/3- and 4/4-way directional seated valves with different types of actuation are available. All listed types are cone-seated valves by design.

The type NBVP is used together with other valves in the valve bank type BA to control the entire hydraulic system.

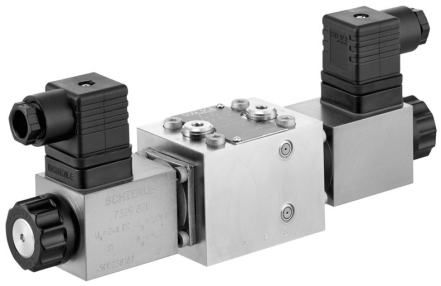

Directional seated valve type NBVP

Features and advantages

- 2/2 and 3/2-way directional valve optionally available with position monitoring
- Versions with partial notching available
- Mounting pressure switches and pressure gauges possible
- Explosion-proof version possible
- Fourth switching position for 4/3-way directional valves
- Optionally with 8-watt solenoids

Intended applications

- Machine tools (cutting and non-cutting)
- Clamping tools, punching tools, fixtures
- Testing machinery
- Wind turbines

2 Available versions

Circuit symbol examples

NBVP 16 S/B 0.8 /2 - WG 110

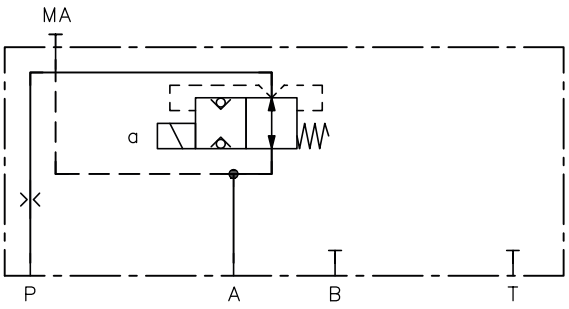

NBVP 16 G/B 0.8 R/ABR2.0 BBR1.5 /A3 B95/400/S - GM 24 - 3/8

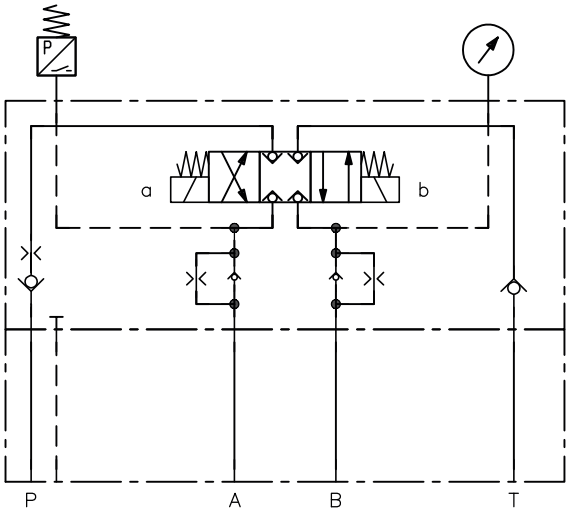

Ordering examples

NBVP 16	S	/B 0,8		/2		-WG 110	
NBVP 16	G	/B 0,8 R	/ABR 2,0 BBR 1,5	/A3 B95/400	/S	-GM 24	-3/8
NBVP 16	RU	/B 0,8 R	/A 3			-G 24	-1/4

4.6 "Single connection block"

2.7 "Actuations"

2.6 "Additional elements at port T"

2.5 "Pressure switches and/or pressure gauges at the ports MA and/or MB"

2.4 "Additional elements at port A and/or B"

2.3 "Additional elements at port P or P1 and P2"

2.2 "Circuit symbol"

2.1 "Basic type and size"

2.1 Basic type and size

Type	Description	Flow rate Q_{max} (l/min)	Pressure p_{max} (bar)
NBVP 16	With standard connection pattern NG 6 in accordance with DIN 24 340-A6 or CETOP 03 in accordance with ISO 4401-03	20	400

NOTICE
Observe the maximum operating pressure of the various circuit symbols and actuations (see Chapter 2.7.1, "Electrical actuations")

2.2 Circuit symbol

2.2.1 Circuit symbols, standard

Coding	Description	Circuit symbol
R	▪ 2/2-way directional valve	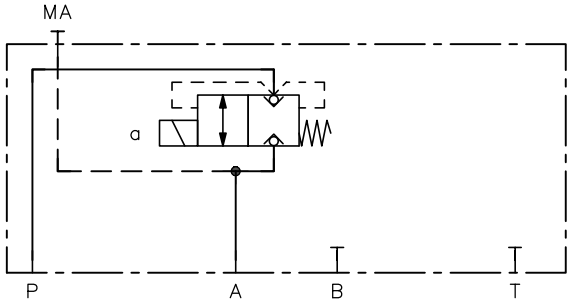
S	▪ 2/2-way directional valve	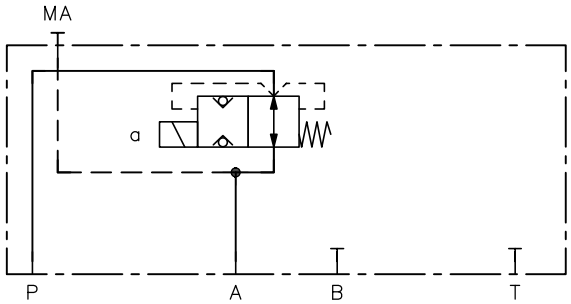
B	▪ 2/2-way directional valve	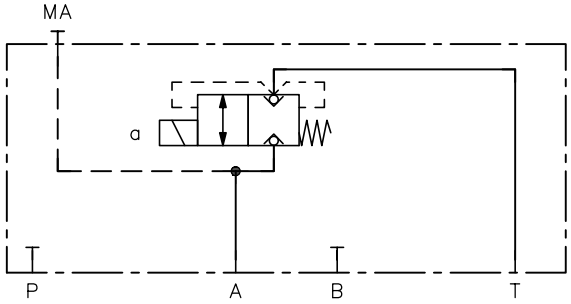
Z	▪ 3/2-way directional valve	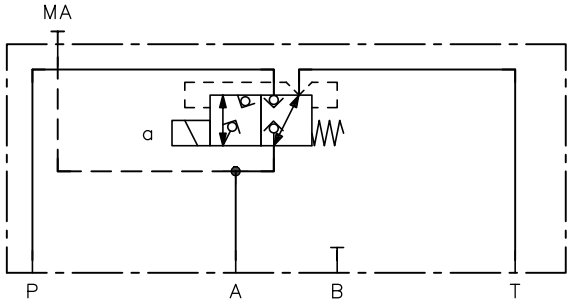
ZD	▪ 3/2-way directional valve – With detent – Only with electrical actuation G, WG – In the case of several adjacent valves, install return pressure stop coding S in T.	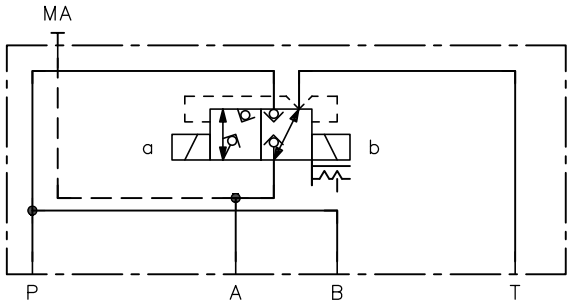

Coding	Description	Circuit symbol
Y	▪ 3/2-way directional valve	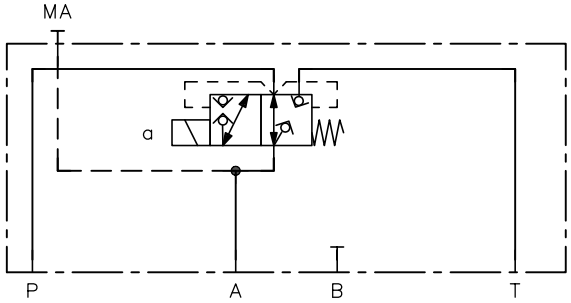
Q	▪ 4/2-way directional valve	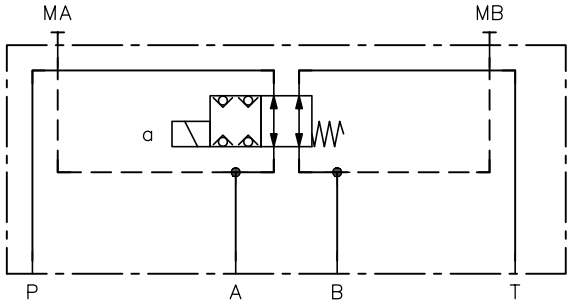
K	▪ 4/2-way directional valve	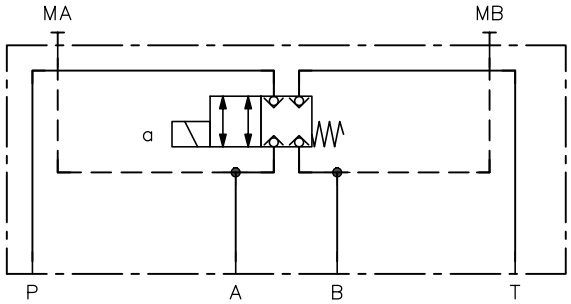
RS	▪ 4/2-way directional valve	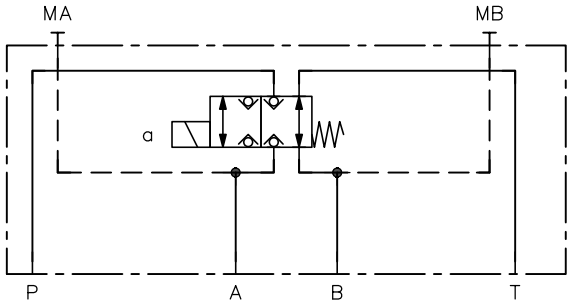
SR	▪ 4/2-way directional valve	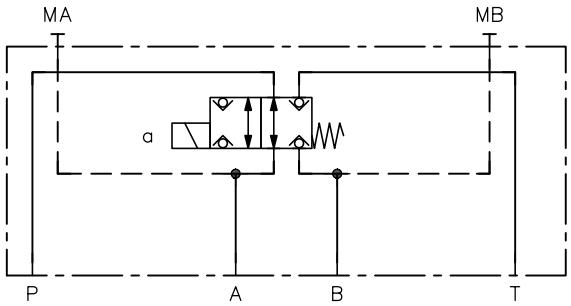

Coding	Description	Circuit symbol
W	▪ 4/2-way directional valve	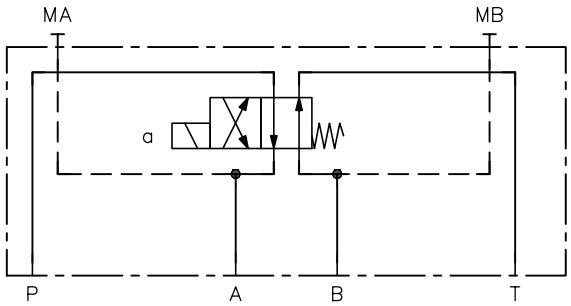
WD	▪ 4/2-way directional valve – With detent	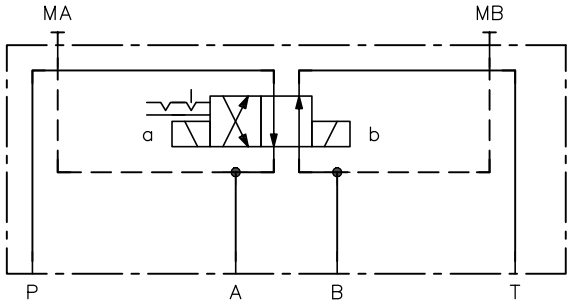
J	▪ 3/3-way directional valve – a + b = 4. Switching position due to simultaneous energization of both solenoids	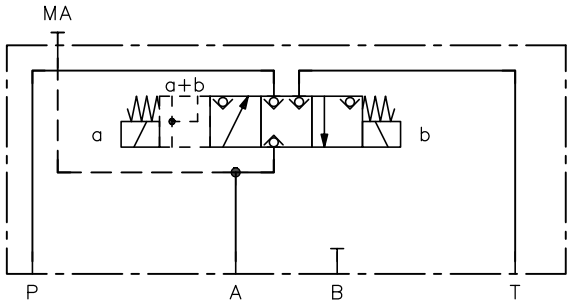
G	▪ 4/3-way directional valve – a + b = 4. Switching position due to simultaneous energization of both solenoids	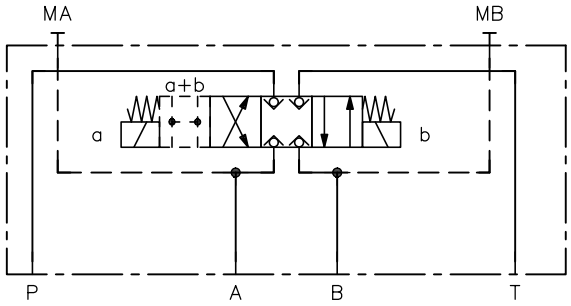
GD	▪ 4/3-way directional valve – a + b = 4. Switching position due to simultaneous energization of both solenoids	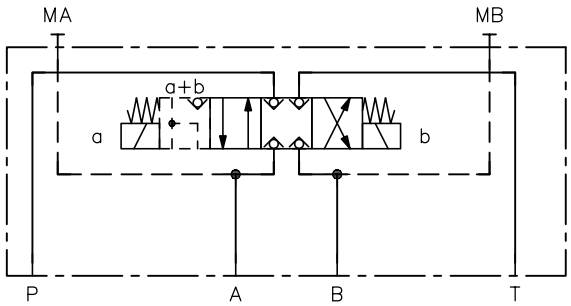

Coding	Description	Circuit symbol
GH	▪ 4/3-way directional valve – a + b = 4. Switching position due to simultaneous energization of both solenoids	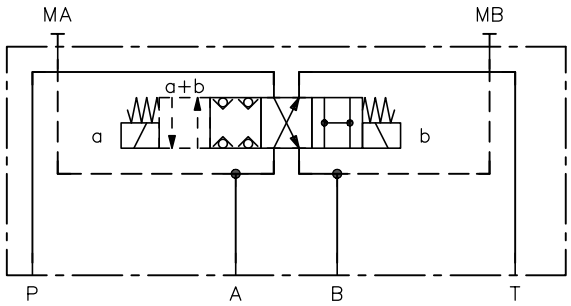
D	▪ 4/3-way directional valve – a + b = 4. Switching position due to simultaneous energization of both solenoids	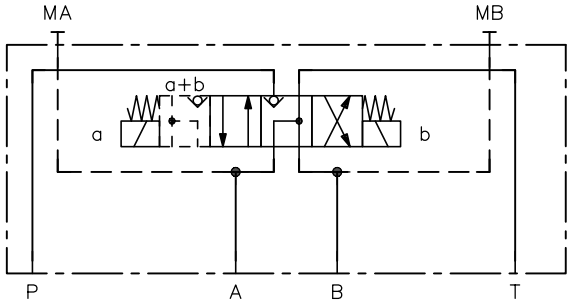
DS	▪ 4/3-way directional valve – a + b = 4. Switching position due to simultaneous energization of both solenoids	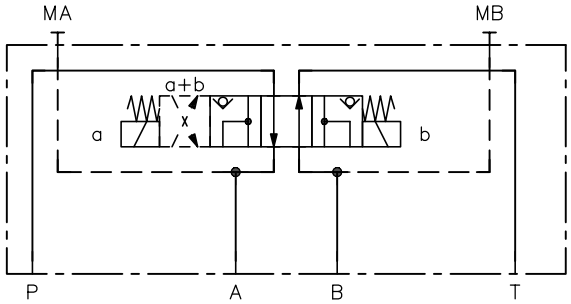

2.2.2 Circuit symbols, 4/4-way directional seated valves

Ordering example

NBVP 16	ZZ	/B1,0	A-page /A	/RB0,8	/AB1,0	/A3	B-page -B	/RB1,2	BB1,5	/B3	/S	-GM 24

"Basic type and size"

"Circuit symbols, 4/4-way directional seated valves"

"Additional elements at port P"

"Additional elements at P1"

"Additional elements at port A"

"Pressure switches and/or pressure gauges at port A"

"Additional elements at P2"

"Additional elements at port B"

"Pressure switches and/or pressure gauges at port B"

"Additional elements at port T"

"Electrical actuations"

Coding	Description	Circuit symbol
ZZ	▪ 4/4-way directional valve – 2x 3/2-way directional valves in a block – For differential circuits	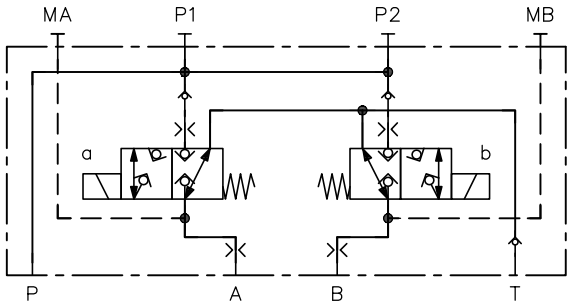
		Simplified circuit symbol 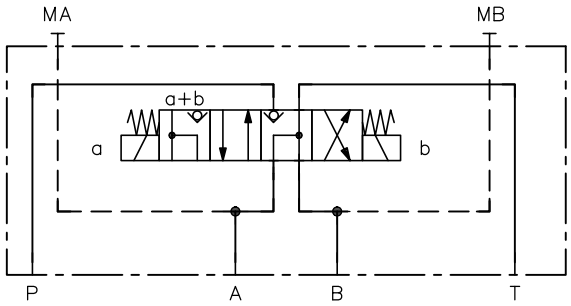
ZY	▪ 4/4-way directional valve – 2x 3/2-way directional valves in a block – For differential circuits	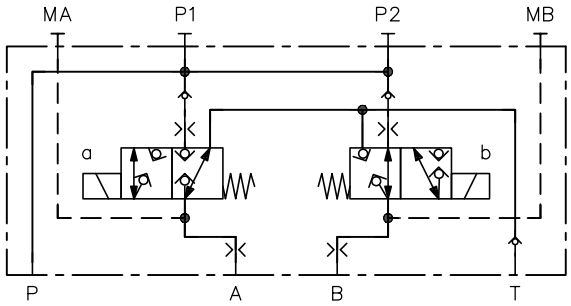
		Simplified circuit symbol 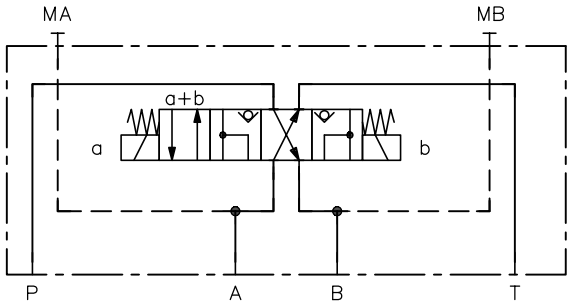

Coding	Description	Circuit symbol
YZ	▪ 4/4-way directional valve – 2x 3/2-way directional valves in a block – For differential circuits – not available in ATEX version	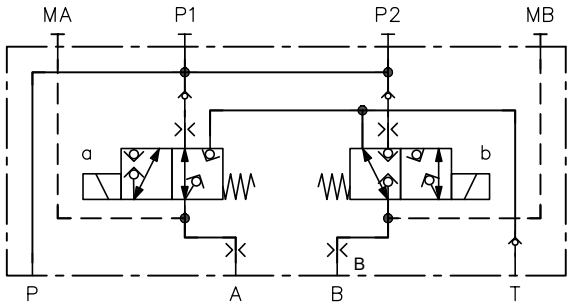
		Simplified circuit symbol 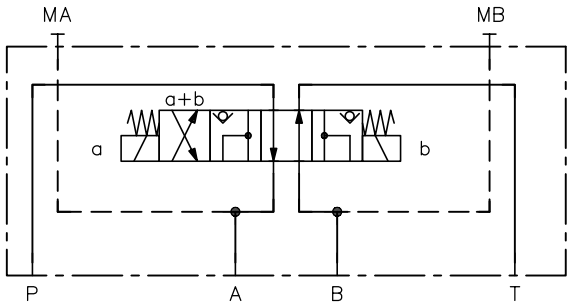
YY	▪ 4/4-way directional valve – 2x 3/2-way directional valves in a block – For differential circuits – not available in ATEX version	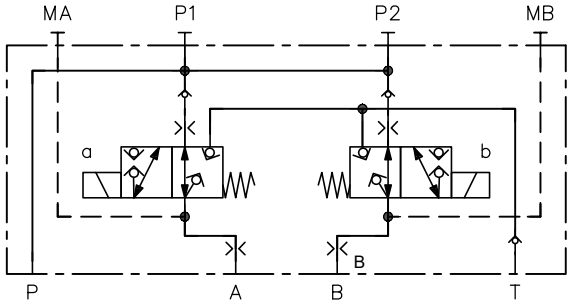
		Simplified circuit symbol 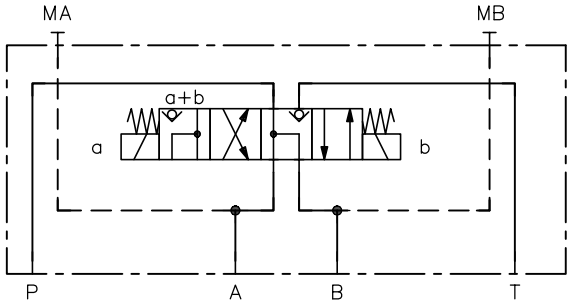

2.2.3 Circuit symbols with inductive switching position monitoring

Ordering example see Chapter 2, "Available versions". Inductive position monitoring directly at the valve plug.

Coding	Description	Circuit symbol
RU..	▪ 2/2-way directional valve ▪ only with electrical actuation ▪ Circuit symbol – **RUO:** Switching position monitoring with DIN connector (normally closed contact) – **RUS:** Switching position monitoring with DIN connector (normally open contact) – **RUMO:** Switching position monitoring with M12 connector (normally closed contact) – **RUMS:** Switching position monitoring with M12 connector (normally open contact)	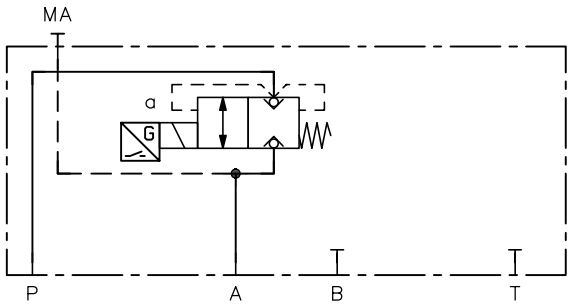
SU..	▪ 2/2-way directional valve ▪ only with electrical actuation ▪ Circuit symbol – **SUO:** Switching position monitoring with DIN connector (normally closed contact) – **SUS:** Switching position monitoring with DIN connector (normally open contact) – **SUMO:** Switching position monitoring with M12 connector (normally closed contact) – **SUMS:** Switching position monitoring with M12 connector (normally open contact)	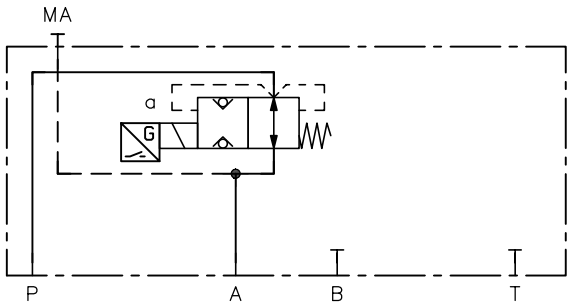
STU..	▪ 2/2-way directional valve ▪ only with electrical actuation X 24, X 24/30W ▪ Circuit symbol – **STUO:** Switching position monitoring with DIN connector (normally closed contact) – **STUS:** Switching position monitoring with DIN connector (normally open contact) – **STUMO:** Switching position monitoring with M12 connector (normally closed contact) – **STUMS:** Switching position monitoring with M12 connector (normally open contact) ▪ 400 bar version with NZP 16 Z10.. Sub-plate (dimensions of excitation system larger than valve block)	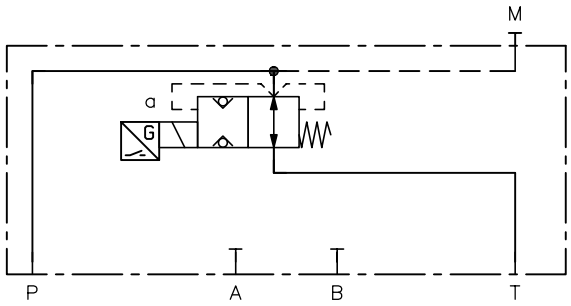
ZU..	▪ 3/2-way directional valve ▪ only with electrical actuation ▪ Circuit symbol – **ZUO:** Switching position monitoring with DIN connector (normally closed contact) – **ZUS:** Switching position monitoring with DIN connector (normally open contact) – **ZUMO:** Switching position monitoring with M12 connector (normally closed contact) – **ZUMS:** Switching position monitoring with M12 connector (normally open contact)	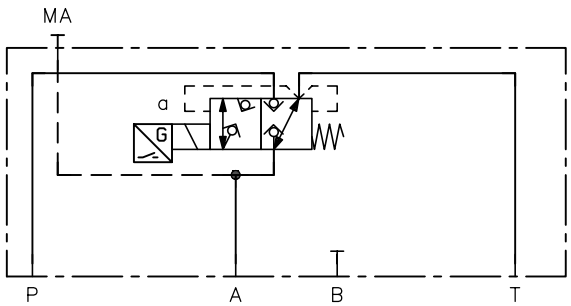

Coding	Description	Circuit symbol
YU..	▪ 3/2-way directional valve ▪ only with electrical actuation ▪ Circuit symbol – **YUO**: Switching position monitoring with DIN connector (normally closed contact) – **YUS**: Switching position monitoring with DIN connector (normally open contact) – **YUMO**: Switching position monitoring with M12 connector (normally closed contact) – **YUMS**: Switching position monitoring with M12 connector (normally open contact)	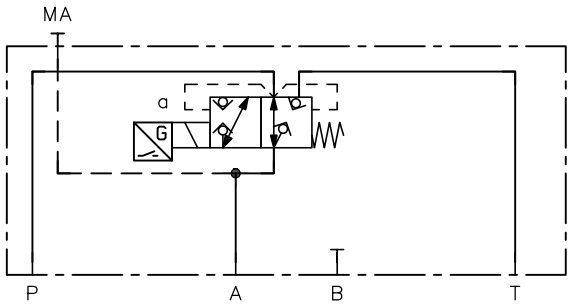

INFORMATION

Inductive contact switch – electrical data, connector assignment, symbols see Chapter 3.5.2, "Electrical data for contact switch"

2.2.4 Circuit symbols with contact switch for switching position monitoring

Ordering example see Chapter 2, "Available versions". Direct position monitoring of the valve plug.
For overlap see Chapter 3.1, "General data"

Coding	Description	Circuit symbol
RK..	▪ 2/2-way directional valve ▪ only with electrical actuation G, WG ▪ Circuit symbol – **RK..**: Switching position monitoring with DIN connector – **RKM**: Switching position monitoring with M12 connector (normally open contact) – **RKMO**: Switching position monitoring with M12 connector (normally closed contact)	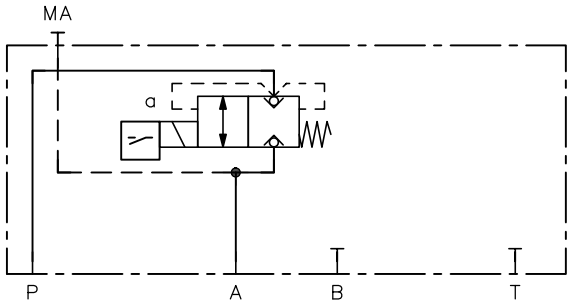
SK..	▪ 2/2-way directional valve ▪ only with electrical actuation G, WG ▪ Circuit symbol – **SK**: Switching position monitoring with DIN connector – **SKM**: Switching position monitoring with M12 connector (normally open contact) – **SKMO**: Switching position monitoring with M12 connector (normally closed contact)	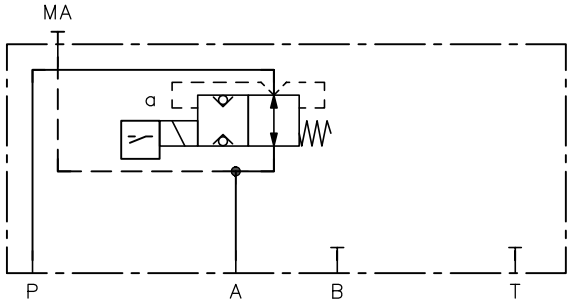
STK..	▪ 2/2-way directional valve ▪ only with electrical actuation X 24, X 24/30W ▪ Circuit symbol – **STK**: Switching position monitoring with DIN connector – **STKM**: Switching position monitoring with M12 connector (normally open contact) – **STKMO**: Switching position monitoring with M12 connector (normally closed contact) ▪ 400 bar version with NZP 16 Z10.. Sub-plate (dimensions of excitation system larger than valve block)	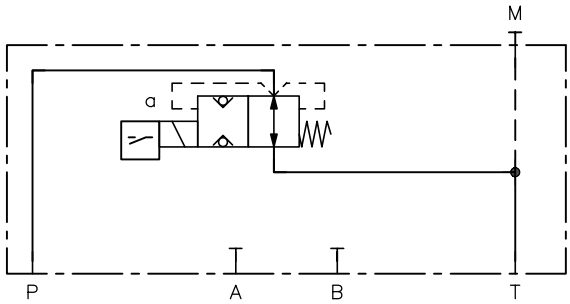
ZK..	▪ 3/2-way directional valve ▪ only with electrical actuation G, WG ▪ Circuit symbol – **ZK**: Switching position monitoring with DIN connector – **ZKM**: Switching position monitoring with M12 connector (normally open contact) – **ZKMO**: Switching position monitoring with M12 connector (normally closed contact)	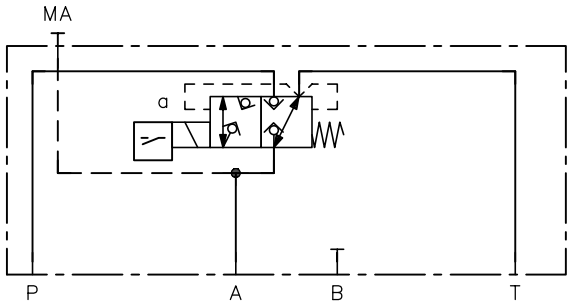

Coding	Description	Circuit symbol
YK..	▪ 3/2-way directional valve ▪ only with electrical actuation G, WG ▪ Circuit symbol – **YK:** Switching position monitoring with DIN connector – **YKM:** Switching position monitoring with M12 connector (normally open contact) – **YKMO:** Switching position monitoring with M12 connector (normally closed contact)	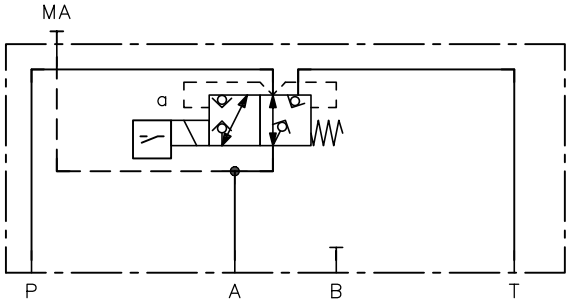
ZDK..	▪ 3/2-way directional valve ▪ with detent, monitored on both sides ▪ only with electrical actuation G, WG ▪ Circuit symbol – **ZDK:** Switching position monitoring a and b with DIN connector **Solenoid a actuated, solenoid b not actuated** ► Switching position monitoring a Rest position 1-3 (LED off) ► Switching position monitoring b Switching position 1-2 (LED on) **Solenoid a not actuated, solenoid b actuated** ► Switching position monitoring a Switching position 1-2 (LED on) ► Switching position monitoring b Rest position 1-3 (LED off) – **ZDKM:** Switching position monitoring a and b with M12 connector (normally open contact/normally open contact) **Solenoid a actuated, solenoid b not actuated** ► Switching position monitoring a Rest position 1-_ (LED off) ► Switching position monitoring b Switching position 1-4(3) (LED on) **Solenoid a not actuated, solenoid b actuated** ► Switching position monitoring a Switching position 1-4(3) (LED on) ► Switching position monitoring b Rest position 1-_ (LED off) – **ZDKMO:** Switching position monitoring a and b with M12 connector (normally closed contact/normally closed contact) **Solenoid a actuated, solenoid b not actuated** ► Switching position monitoring a Rest position 1-4(3) (LED on) ► Switching position monitoring b Switching position 1-_ (LED off) **Solenoid a not actuated, solenoid b actuated** ▪ Switching position monitoring a Switching position 1-_ (LED off) ▪ Switching position monitoring b Rest position 1-4(3) (LED on)	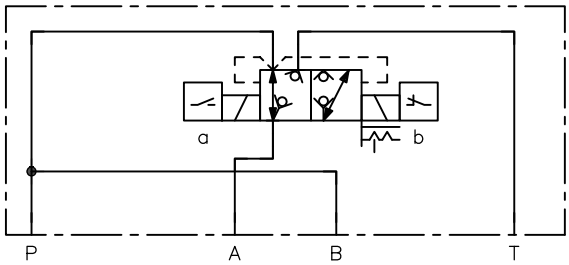 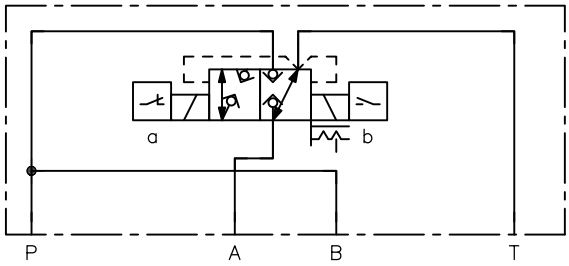

Coding	Description	Circuit symbol
ZDK1..	▪ 3/2-way directional valve ▪ with detent, monitored on one side ▪ only with electrical actuation G, WG ▪ Circuit symbol – **ZDK1**: Switching position monitoring a with DIN connector **Solenoid a actuated, solenoid b not actuated** ► Switching position monitoring a Rest position 1-3 (LED off) **Solenoid a not actuated, solenoid b actuated** ► Switching position monitoring a Switching position 1-2 (LED on) – **ZDK1M**: Switching position monitoring a with M12 connector (normally open contact) **Solenoid a actuated, solenoid b not actuated** ► Switching position monitoring a Rest position 1-_ (LED off) **Solenoid a not actuated, solenoid b actuated** ► Switching position monitoring a Switching position 1-4(3) (LED on) – **ZDK1MO**: Switching position monitoring a with M12 connector (normally closed contact) **Solenoid a actuated, solenoid b not actuated** ► Switching position monitoring a Rest position 1-4(3) (LED on) **Solenoid a not actuated, solenoid b actuated** ► Switching position monitoring a Switching position 1-_ (LED off)	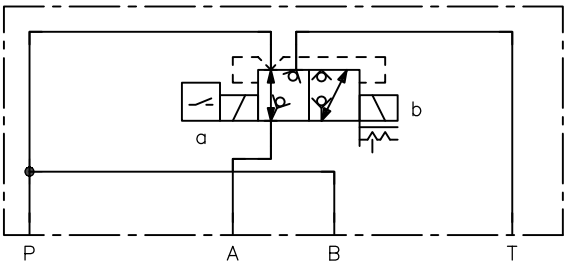 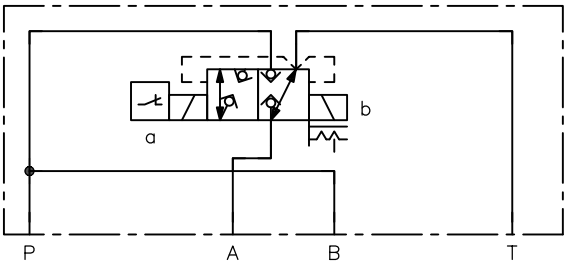

INFORMATION

Mechanical contact switch – electrical data, connector assignment, symbols see Chapter 3.5.2, "Electrical data for contact switch"

2.3 Additional elements at port P or P1 and P2

Additional elements at port P

Coding	Description	Circuit symbol
R	Check valve type ER 13 according to D 7235	
B..	Orifice (only for circuit symbol R, RK, RU, S, SK, SU, STK, STU, Z, ZK, ZU, ZD, Y, YK, YU, G, GD, GH, Q, K, W, WD, SR, RS, D, DS, J) Orifice ∅ (mm): 0.4; 0.5; 0.6; 0.7; 0.8; 0.9; 1.0; 1.1; 1.2; 1.4; 1.5; 1.8; 2.0; 2.4; 2.5	
B..R	Restrictor check valve (not for circuit symbol B) Orifice ∅ (mm): 0.4; 0.5; 0.6; 0.7; 0.8; 0.9; 1.0; 1.1; 1.2; 1.4; 1.5; 1.8; 2.0; 2.4; 2.5	
B..	Orifice (only for circuit symbol ZZ, ZY, YZ, YY) Orifice ∅ (mm): 0.4; 0.5; 0.6; 0.7; 0.8; 1.0; 1.1; 1.2; 1.4; 1.5; 1.8; 2.0; 2.4; 2.5	
BV..	Restrictor check valve (only for circuit symbol ZZ, ZY, YZ, YY) Orifice ∅ (mm): 0.6; 0.7; 0.8; 0.9; 1.0; 1.1; 1.2; 1.4; 1.5; 1.8; 2.0	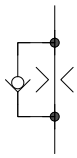

NOTICE
Additional elements at port P not with circuit symbol B

Pump connection P

(Circuit symbol R, RK, RU, S, SK, SU, STK, STU, Z, ZK, ZU, ZD, Y, YK, YU, G, GD, GH, Q, K, W, WD, SR, RS, D, DS, J)

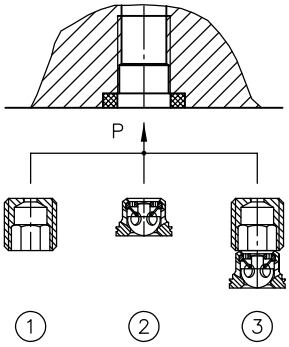

1 Orifice **B..**
2 Check valve **R**
3 Restrictor check valve **B..R**

(Circuit symbol ZZ, ZY, YZ, YY)

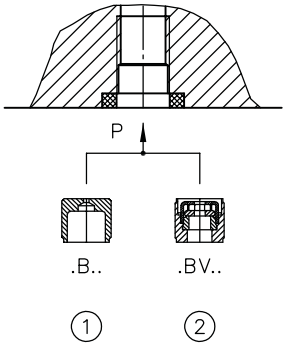

1 Orifice **.B..**
2 Restrictor check valve (observe installation position!) **.BV..**

Additional elements at port P1 and P2; only with circuit symbol ZZ, ZY, YZ, YY

Coding	Description	Circuit symbol
R	Check valve type RB1 according to D 7445	
B..	Orifice Orifice ∅ (mm): 0.4; 0.5; 0.6; 0.7; 0.8; 0.9; 1.0; 1.1; 1.2; 1.4; 1.5; 1.8; 2.0; 2.4; 2.5	

Port P1 and P2

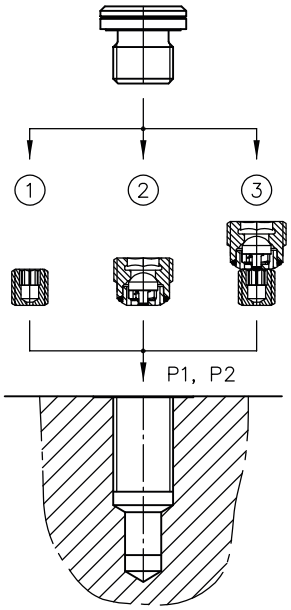

1 Orifice **B..**
2 Check valve **R**
3 Restrictor check valve **RB..**

2.4 Additional elements at port A and/or B

Coding	Description	Circuit symbol
AB.. **BB..**	Orifice at A and/or B Orifice ∅ (mm): 0.4; 0.5; 0.6; 0.7; 0.8; 0.9; 1.0; 1.2; 1.5; 2.0; 2.5	
ABV.. **BBV..**	Restrictor check valve in A and/or B to restrict consumer, type EBR 14 according to Sk 7966 300 Orifice ∅ (mm): 0.6; 0.7; 0.8; 0.9; 1.0; 1.2; 1.5; 2.0	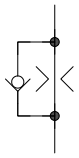
ABR.. **BBR..**	Restrictor check valve in A and/or B to open consumer, type EBR 14 according to Sk 7966 300 Orifice ∅ (mm): 0.6; 0.7; 0.8; 0.9; 1.0; 1.2; 1.5; 2.0	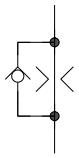

Consumer ports A and B

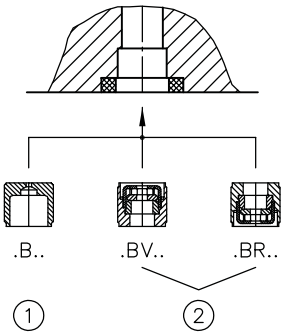

1 Orifice **.B..**

2 Restrictor check valve (observe installation position!) **.BV..**; **.BR..**

2.5 Pressure switches and/or pressure gauges at the ports MA and/or MB

Coding for circuit symbols			Pressure switch with adjustment range (bar)		Pressure gauge with display range up to (bar)	Publication
R, S, B, Z, Y	G, D, DS, W, Q, RS, SR, K, J, WD, GD, GH, ZZ, ZY, YZ, YY, ZD, RK, SK, STK, ZK, YK, RU, SU, STU, ZU, YU	G, D, DS, W, Q, RS, SR, K, J, WD, GD, GH, ZZ, ZY, YZ, YY				
	Port MA	Port MB				
2	--	--	Without DG	prepared	--	D 5440
3	A3	B3	DG 33	200 to 700	--	
4	A4	B4	DG 34	100 to 400	--	
5	A5	B5	DG 35	20 to 250	--	
6	A6	B6	DG 36	4 to 12	--	
7	A7	B7	DG 365	12 to 170	--	
8	A8	B8	DG 364	4 to 50	--	
5E1	A5E1	B5E1	DG 51 E-I 100		--	D 5440 E/2
5E2	A5E2	B5E2	DG 51 E-I 250		--	
5E4	A5E4	B5E4	DG 51 E-I 400		--	
5E6	A5E6	B5E6	DG 51 E-I 600		--	
6E1	A6E1	B6E1	DG 61		--	D 5440 F
6ER1	A6ER1	B6ER1	DG 61 R		--	
6E2	A6E2	B6E2	DG 62		--	
6ER2	A6ER2	B6ER2	DG 62 R		--	
6E4	A6E4	B6E4	DG 64		--	
6ER4	A6ER4	B6ER4	DG 64 R		--	
--	A95/100	B95/100	--		100	D 7077
--	A95/160	B95/160	--		160	
--	A95/250	B95/250	--		250	
--	A95/400	B95/400	--		400	

NOTICE

- Circuit symbols R, S, B, Y, Z: Attachment of a pressure gauge or additional elements instead of the pressure switch with Y 9-X 84.. according to D 7077 possible
- Pressure gauge connections G 1/8

NBVP 16 Y/R/5-GM 24

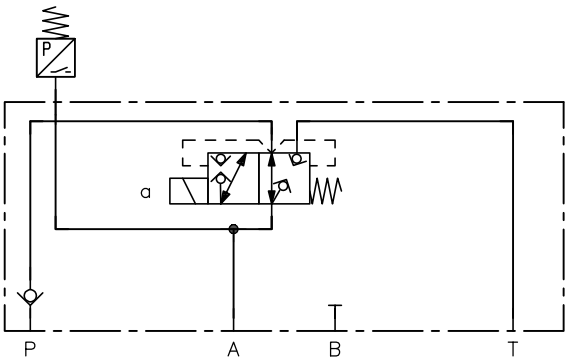

NBVP 16 G/A95/400 B95/400-G 24

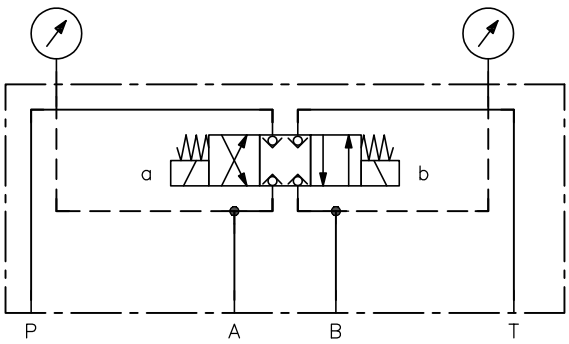

2.6 Additional elements at port T

Coding	Description	Opening pressure (bar)	Circuit symbol
S	Return pressure stop (check valve) type ER 14 according to Sk 7966 200	approx. 0.07	
S 0.2		approx. 0.2	
S 1		approx. 1.0	

Return port T

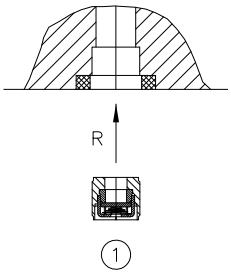

1 Return pressure stop **S..**

2.7 Actuations

2.7.1 Electrical actuations

p_{max}: 400 bar

Excitation system with male connector Dimension diagram A to F, see Chapter 4.3	Circuit symbol						Nominal voltage
	R, S, B, Z, Y, J	ZD, K, G, RK, SK, ZK, YK, ZDK, RU, SU, ZU, YU	Q, RS, SR, W [1], GD [2], D, DS, ZZ, ZY, YZ, YY	W [3]	WD	STK, STU	
X 12, G 12	F	A	C				12 V DC
X 24, G 24	F	A	C		C		24 V DC
X 24/30W G 24/30W				D		D	24 V DC
X 48, G 48	F	A	C				48 V DC
X 98, G 98	F	A	C				98 V DC
X 98/30W G 98/30W				D			98 V DC
X 110, G 110	F	A					110 V DC
X 205, G 205	F	A	C				205 V DC
X 205/30W G 205/30W				D			205 V DC
X 220, G 220	F	A					220 V DC
L 12	F	A	C				12 V DC
L 24	F	A	C				24 V DC
L5K 12			C				12 V DC
L5K 24	F	A	C				24 V DC
AMP 12		A	C				12 V DC
AMP 24		A	C				24 V DC
AMP 48		A	C				48 V DC
DT 12		A	C				12 V DC
DT 24		A	C				24 V DC
WG 110	F	A	C				110 V AC, 50/60 (98 V DC)
WG 230	F	A	C				230 V AC, 50/60 (205 V DC)
WG 110/30W				D			110 V AC, 50/60 (98 V DC)
WG 230/30W				D			230 V AC, 50/60 (205 V DC)

1) p_{max} = 250 bar

2) Duty cycle to 50°C ambient temperature: 100% duty cycle - 5 min
(If current is fed into valve side a and b on both sides, an economy switch MSD4 P55 is required)

3) Designation of the reinforced solenoid version in the valve bank: MS

p_{max}: 250 bar

Excitation system with male connector Dimension diagram A to C, see Chapter 4.3	Circuit symbol			Nominal voltage
	R, S, B, Z, Y, ZD, K, J, G	Q, RS, SR, GH [1], D, DS, ZZ, YZ, YY, ZY	STK, STU	
XM 12, GM 12	B	C		12 V DC
XM 24, GM 24	B	C		24 V DC
X 24, G 24			A	24 V DC
XM 48, GM 48	B	C		48 V DC
XM 98, GM 98	B	C		98 V DC
XM 205, GM 205	B	C		205 V DC
LM 12	B	C		12 V DC
LM 24	B	C		24 V DC
L5KM 12		C		12 V DC
L5KM 24	B	C		24 V DC
AMPM 12	B			12 V DC
AMPM 24	B			24 V DC
AMPM 48	B			48 V DC
DTM 12	B			12 V DC
DTM 24	B			24 V DC
M 12	B			12 V DC
M 24	B			24 V DC
WGM 110	B	C		110 V AC, 50/60 Hz
WGM 230	B	C		230 V AC, 50/60 Hz

1) p_{max} = 180 bar

Excitation system with male connector Dimension diagram A to F, see Chapter 4.3	Circuit symbol					Nominal voltage
	R, S, B, Z, Y, J, ZD	D, DS, RS, SR, ZZ,ZY, YY, YZ	W [2]	WD [3]	G, K	
G 24/8W					D	24 V DC
X 24/8W					D	24 V DC
L 24/8W					D	24 V DC
M 24/8W	A [4]	D	D	C	D	24 V DC
X 24 EX 55 FM	E	E			E	24 V DC
X 24 M EX 55 FM	E	E			E	24 V DC

2) % duty cycle - 5 min = 50%; p_{max} 250 bar at Q_{max} = 6 l/min or p_{max} = 100 bar at Q_{max} = 18 l/min

3) Q_{max} 8 l/min

4) not ZD

NOTICE

The specification of the solenoid voltage and magnetic plug refers to the directional valve.

Assembled pressure switches DG 3, DT 11, DG 1 are supplied as standard with a DIN connector; pressure switches DG 51, DG 6, DG 7 and DT 2 are supplied as standard with an M 12 connection.

Plug types

Coding	Designation, connector	Protection class (IEC 60529)
G(M)..	Line connector MSD3-309	IP 65
X(M)..	without connector	
L(M)..	LED connector	
L5K(M)..	Line connector with 5-m connecting line	
AMP(M)..	AMP-Junior, 2-pin, coding 1	
DT(M)..	Deutsch connector, 2-pin, type DT04-2P	IP 68
M..	M 12 connector	IP 54
WG(M)..	LED connector with alternating rectifier	IP 65
G../8W	Line connector MSD3-309	
X../8W	without connector	
L../8W	LED connector	
M../8W	M 12 connector	IP 67
X 24 EX 55 FM	Terminal box (explosion-proof)	
X 24 M EX 55 FM	Terminal box (explosion-proof), metric connection	

NOTICE
The specifications regarding the IP protection class apply for versions featuring a properly assembled male connector.
The specified protection classes only refer to the plug connections and not to the complete valve.

Connection pattern

G.., X.., L.., (WG..)

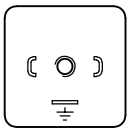

AMP..

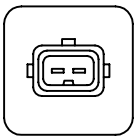

M..

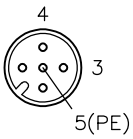

DT..

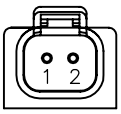

2.7.2 Manual override

Coding	Description
without coding	Series
T	with detent
T1	without detent (spring return mechanism)

2.7.3 Alternative actuations

Coding	Pressure p_{max} (bar)	Circuit symbols
Hydraulic		
H 1/4	400	R, S, B, Z, Y, Q, K, RS, SR, W, J, G, D, DS
Pneumatic		
P	400	R, S, B, Z, Y, Q, K, RS, SR, W, J, G, D, DS
Mechanical pin		
T	400	R, S, B, Z, Y, Q, K, RS, SR, W
Mechanical roller		
K	400	R, S, B, Z, Y, Q, K, RS, SR, W
Manual with hand lever		
A	400	R, S, B, Z, Y, Q, K, RS, SR, W
Manual with detent with hand lever		
CD	400	R, S, B, Z, Y, Q, K, RS, SR, W
Manual with detent without hand lever		
KD	400	R, S, B, Z, Y, Q, K, RS, SR, W

Actuation symbols

Electrical	Hydraulic	Pneumatic P	Mechanical		Manual A
	H 1/4		Pin T	Roller K	
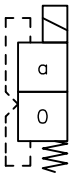	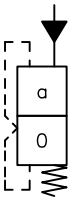	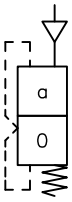	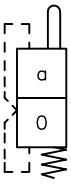	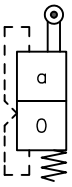	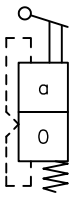

Additional locking for notched actuations CD, KD

Coding	Description
without coding	without
1	Locking in switch position b
2	Locking in switch position a
3	Locking in switch position a and b

Circuit symbol

CD

CD1

CD2

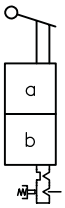

CD3

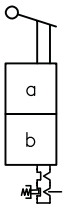

KD

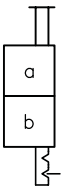

KD1

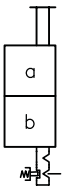

KD2

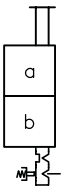

KD3

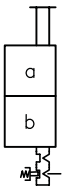

3 Parameters

3.1 General data

Designation	2/2, 3/2, 3/3, 4/2, 4/3 and 4/4-way directional seated valve type NBVP
Design	Conical seated valve, zero leakage
Model	Manifold mounting with NG 6 connection pattern
Material	Steel, zinc-nickel coated
Installation position	As desired
Overlap	For circuit symbols Z, ZD, Y, W, WD, GD, D, DS, ZZ, ZY, YZ, YY negative, transition from one flow direction to the other is completed only at the stroke end position. During switching, all passages are connected to each other. For circuit symbols R, S, B, Q, K, RS, SR, J, G, GH, no overlap; for 3/3 and 4/3-way directional valves, only during the transition to 4. Switching position negative. For 2/2 and 3/2-way directional seated valves monitored for switching position, positive overlap in the event of signal change.
Hydraulic fluid	Hydraulic fluid, according to DIN 51524 Parts 1 to 3; ISO VG 10 to 68 according to DIN ISO 3448 Viscosity range: 4 - 1500 mm^2/s Optimal operating range: approx. 10 - 500 mm^2/s Also suitable for biologically degradable hydraulic fluids type HEPG (polyalkylene glycol) and HEES (synthetic ester) at operating temperatures up to approx. +70°C.
Cleanliness level	**ISO 4406** 21/18/15...19/17/13 **Exemptions:** ▪ see Chapter 2.2.3, "Circuit symbols with inductive switching position monitoring" **ISO 4406** 20/14/14 Particle size X = 15 µm according to VDA 19
Temperatures	Environment: approx. -40 to +80 °C, hydraulic fluid: -25 to +80 °C, pay attention to the viscosity range. Start temperature: down to -40 °C is permissible (take account of the start viscosities!), as long as the steady-state temperature is at least 20 K higher during subsequent operation. Biologically degradable hydraulic fluids: note manufacturer specifications. With consideration for the seal compatibility, not above +70°C. **NOTICE** Observe the correct duty cycle, see Chapter 3.5.1, "Electrical actuation" Observe the restrictions for explosion-proof solenoids.

3.2 Pressure and volumetric flow

Operating pressure	▪ $p_{max\ P, A, B}$ = 400 bar / 250 bar ▪ $p_{max\ T}$ = 50 bar **Exemptions:** ▪ $p_{max\ T}$ = $p_{max\ P, A, B}$ – Circuit symbol Z, Y, J ▪ $p_{max\ T}$ = 250 bar – Circuit symbol ZD – Circuit symbol Z with explosion protection (X 24 EX 55 FM, X 24 EX M 55 FM) Observe pressure restrictions for circuit symbol W in combination with 8-watt solenoids (see Chapter 2.7.1, "Electrical actuations") The pressure at port T must be lower than the pressure at P or A and B **NOTICE** Further restrictions see Chapter 2.7.1, "Electrical actuations"!
Flow rate	▪ Q_{max} = 20 l/min ▪ Q_{max} = 15 l/min for valves with position monitoring ▪ Valves with position monitoring: Defined leakage flow rate at the switching point Q ≦ 1 l/min **NOTICE** Further restrictions see Chapter 2.7.1, "Electrical actuations"!
Flow limit	▪ In the event of accumulator circuits or in the event of connection to high-pressure circuits with large pump delivery flows (ring lines, central supplies), the flow streams must be limited to Q_{max} – see Chapter 2, "Available versions" ▪ The orifice must always be located on the accumulator side. – see Chapter 2.3, "Additional elements at port P or P1 and P2" – see Chapter 2.4, "Additional elements at port A and/or B" ▪ The check valve prevents unwanted reversal of the flow direction. – see Chapter 2.3, "Additional elements at port P or P1 and P2" – see Chapter 2.6, "Additional elements at port T"

3.3 Weight

Complete with actuation

Electrical **G.., L.., X.., WG.., M..,** **X 24 EX 55 FM,** **X 24 M EX 55 FM**	**Type**	
	NBVP 16 B (R, S, RK, SK, RU.., SU..)	= 1.5 kg
	NBVP 16 Z (Y)	= 1.7 kg
	NBVP 16 ZD (Q, K, RS, SR, W, WD, ZK, YK, ZU.., YU..)	= 2.1 kg
	NBVP 16 G (J, D, DS, GD, GH)	= 2.4 kg
	NBVP 16 ZZ (ZY, YZ, YY)	= 2.6 kg
Electrical **GM.., LM.., XM.., WGM..**	**Type**	
	NBVP 16 B (R, S, RK, SK, RU.., SU..)	= 1.4 kg
	NBVP 16 Z (Y)	= 1.6 kg
	NBVP 16 ZD (Q, K, RS, SR, W, WD, ZK, YK, ZU.., YU..)	= 2.1 kg
	NBVP 16 G (J, GD, GH)	= 2.2 kg
	NBVP 16 D (DS)	= 2.4 kg
	NBVP 16 ZZ (ZY, YZ, YY)	= 2.6 kg
Hydraulic H 1/4	**Type**	
	NBVP 16 B (R, S)	= 1.1 kg
	NBVP 16 Z (Y)	= 1.3 kg
	NBVP 16 ZD (Q, K, RS, SR, W)	= 2.3 kg
	NBVP 16 G (J, D, DS)	= 3.0 kg
Pneumatic P	**Type**	
	NBVP 16 B (R, S)	= 1.0 kg
	NBVP 16 Z (Y)	= 1.2 kg
	NBVP 16 ZD (Q, K, RS, SR, W)	= 1.6 kg
	NBVP 16 G (J, D, DS)	= 1.6 kg
Mechanical T	**Type**	
	NBVP 16 B (R, S)	= 1.1 kg
	NBVP 16 Z (Y)	= 1.3 kg
	NBVP 16 ZD (Q, K, RS, SR, W)	= 1.7 kg
Mechanical K	**Type**	
	NBVP 16 B (R, S)	= 1.4 kg
	NBVP 16 Z (Y)	= 1.6 kg
	NBVP 16 ZD (Q, K, RS, SR, W)	= 2.0 kg

manual A	**Type**	
	NBVP 16 B (R, S)	= 1.4 kg
	NBVP 16 Z (Y)	= 1.6 kg
	NBVP 16 ZD (Q, K, RS, SR, W)	= 2.0 kg
manual with detent CD, KD	**Type**	
	NBVP 16 B (R, S)	= 1.4 kg
	NBVP 16 Z (Y)	= 1.6 kg
	NBVP 16 ZD (Q, K, RS, SR, W)	= 1.9 kg
	every type: each pressure switch	= + 0.3 kg

All weights are approximate specifications and without guarantee.

3.4 Characteristic lines

Viscosity of the hydraulic fluid approx. 60 mm²/s

Basic valves

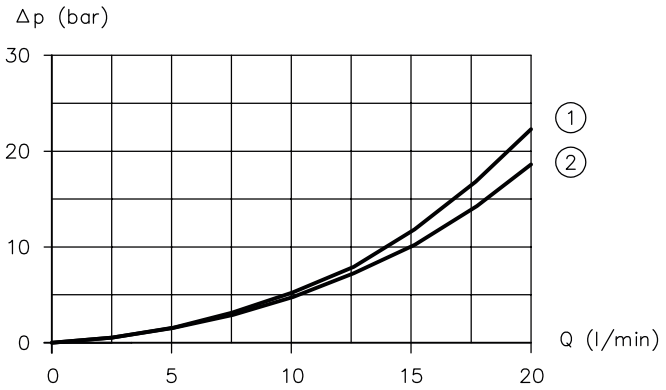

Q flow rate (l/min); Δp flow resistance (bar)

1 NBVP 16-Z(ZD), Y, K, Q, W
2 NBVP 16-R, S, RS, SR, B, ZZ, YY, YZ, ZY

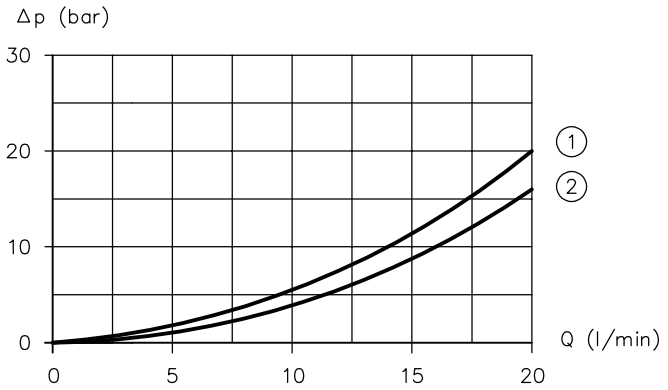

Q flow rate (l/min); Δp flow resistance (bar)

1 NBVP 16-G, D, J, DS (P → A,B)
2 NBVP 16-G, D, J, DS (A,B → T)

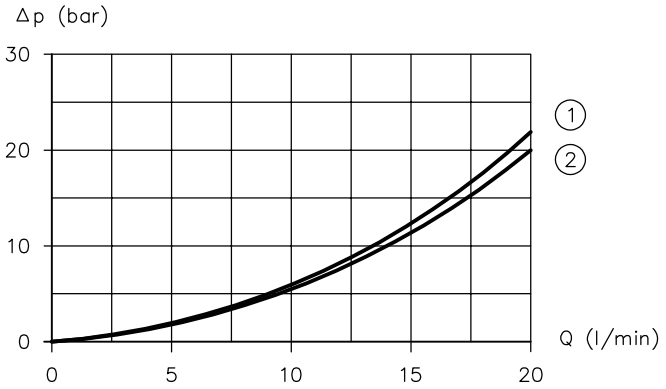

Q flow rate (l/min); Δp flow resistance (bar)

1 NBVP 16-WD (P → B, B → T)
2 NBVP 16-WD (A → T, P → A)

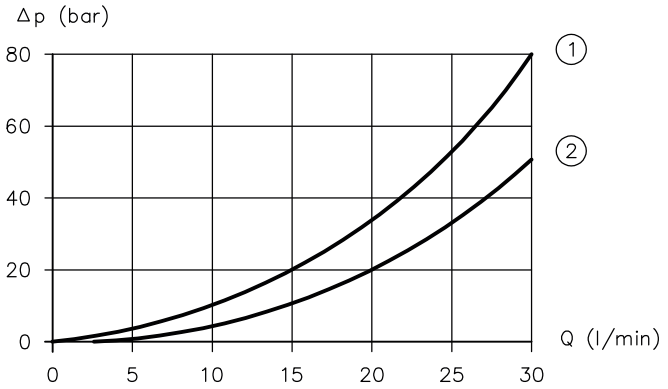

Q flow rate (l/min); Δp flow resistance (bar)

1 NBVP 16-GD (A → T, B → T)
2 NBVP 16-GD (P → A, P → B)

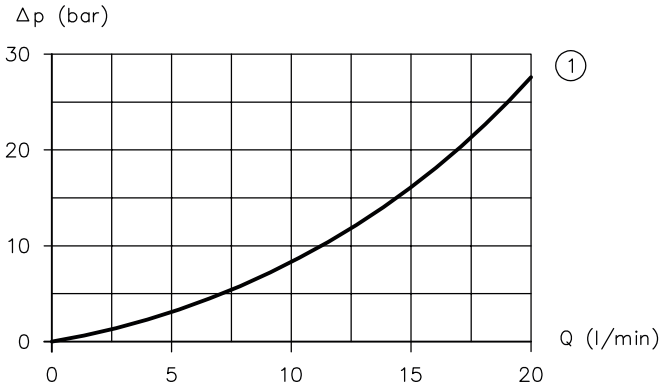

Q flow rate (l/min); Δp flow resistance (bar)

1 NBVP 16 RK, SK, ZK, YK, STK, ZDK(1), STU.., RU.., SU.., ZU.., YU..

Additional orifices

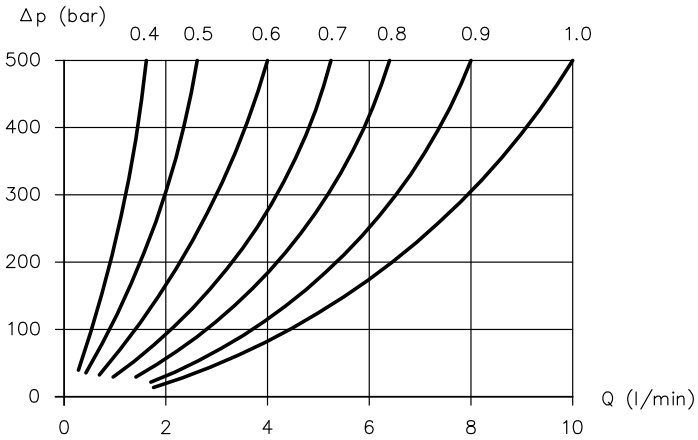

Q flow rate (l/min); Δp flow resistance (bar)

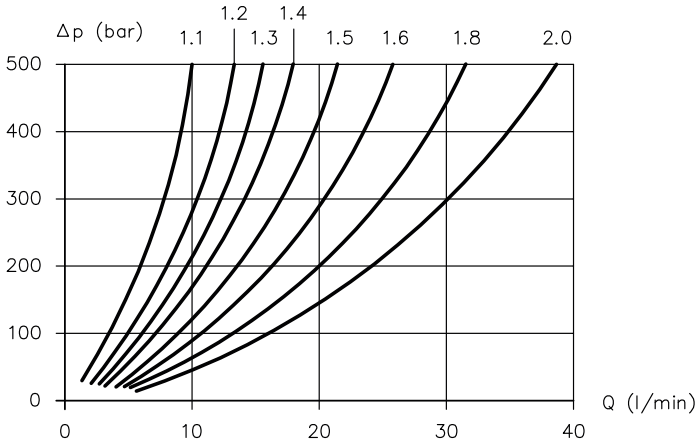

Q flow rate (l/min); Δp flow resistance (bar)

3.5 Electrical data

3.5.1 Electrical actuation

Nominal power P_N		12 V DC	24 V DC	48 V DC	98 V DC	110 V DC	205 V DC	220 V DC
Actuations with dimension diagram "A"	G.., X.., L.., L5K.., AMP.., DT..	30 W	30 W	30 W	29.1 W	--	29.9 W	--
	M 24/8W	--	8 W	--	--	--	--	--
	WG..	--	--	--	29.1 W	--	29.9 W	--
Actuations with dimension diagram "B"	GM.., XM.., LM.., L5KM.., AMPM.., DTM..	26.2 W	26.5 W	26 W	24.8 W	--	28 W	--
	WGM..	--	--	--	24.8 W	--	28 W	--
Actuations with dimension diagram "C"	G(M).., X(M).., L(M).., L5K(M).., AMP(M).., DT(M)..	27.2 W	30 W	32.7 W	30 W	--	29.9 W	--
	M 24/8W	--	8 W	--	--	--	--	--
	WG(M)..	--	--	--	30 W	--	29.9 W	--
Actuations with dimension diagram "D"	X(G)... /30W	--	30 W	--	30 W	--	30 W	--
	X (G, L, M) 24/8W	--	8 W	--	--	--	--	--
Actuations with dimension diagram "E"	X 24 EX 55 FM	--	23 W	--	--	--	--	--
	X 24 EX M 55 FM	--	23 W	--	--	--	--	--
Actuations with dimension diagram "F"	G.., X.., L.., L5K..	29.3 W	27.5 W	--	28.7 W	27.5 W	30.1 W	27.9 W
	WG..	--	--	--	28.7 W	--	30.1 W	--
Voltage tolerance	±10%							
Switching times (reference value)	▪ on or off: approx. 50 to 60 ms ▪ for 24/8W, WG ... and circuit symbol ZD, WD, 2–3 times longer							
Actuation pulse	Circuit symbol ZD, WD: approx. 500 ms							
Switching operations	approx. 2000/h, to be seen as approximately evenly distributed							
Contact temperature	120°C at 20°C ambient temperature							
Insulation material class	F							

Relative duty cycle	relative duty cycle during operation (100% duty cycle marking on the solenoid)

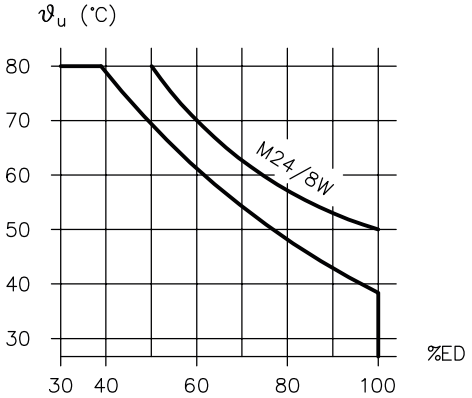

% duty cycle 5 min rel. duty cycle; ϑU ambient temperature (°C)

NOTICE
The thermal load on the coil can be reduced by means of an economy circuit, for example.

Protection class	Depending on the actuating solenoid see Chapter 2.7.1, "Electrical actuations"
Electrical connection	Depending on the actuating solenoid see Chapter 2.7.1, "Electrical actuations"
Cut-off energy	WA ≤ 0.4 Ws

Circuit diagrams

DC voltage

G(M).., X(M)..

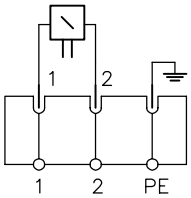

L(M)..

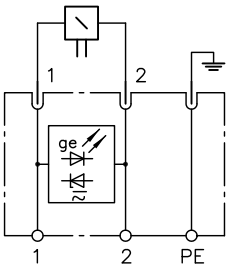

M 24/8W

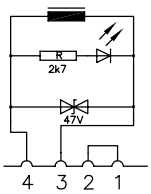

AMP(M).., DT(M)..

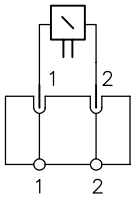

AC voltage

WG(M)..

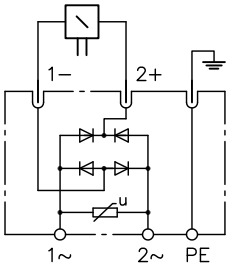

Electrical data for explosion-proof solenoids

NOTICE

When using solenoids for potentially explosive atmospheres, it is essential to observe the operating instructions B ATEX and the separate operating instructions for the respective solenoid.

Refer to the applicable operating instructions B 22 (EX22) for operating thresholds, classifications, electrical parameters and electrical connections.

Coding	Operating instructions with declaration of conformity
X 24 EX 55 FM X 24 EX M 55 FM	▪ B ATEX ▪ B 22 (EX22)

Dimensioning Sub-plates

Minimum volume for heat dissipation

Valves arranged individually or next to one another, mounted in a block

Arrangement for individual connection blocks

	Arranged in single row	Arranged in multiple rows	Single connection block
min. distance between magnet surfaces	6 mm	25 mm	--
min. volume per solenoid	152 200 mm³	192 300 mm³	61 250 mm³

Arranged in single row

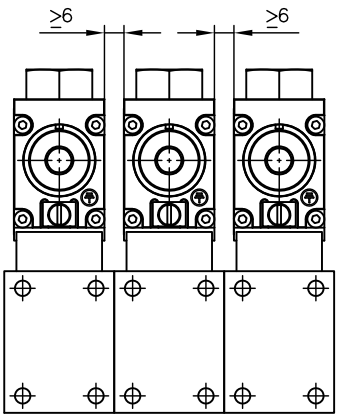

Arranged in multiple rows

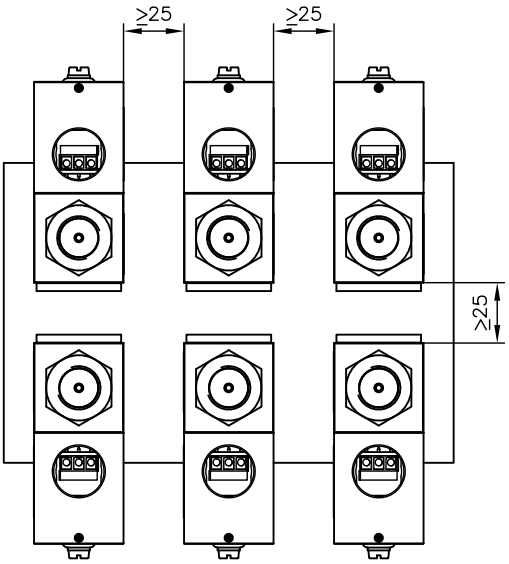

Valves arranged individually or next to one another with HAWE connection block for manifold mounting, mounted on a sub-plate

Connection blocks in row per solenoid

Coding	Circuit symbol	Min. volume of HAWE connection block (mm³)	Min. volume of customer-specific sub-plate (mm³)
- P	R, S	58 050	94 170
	Z	112 230	39 990
- P-VP	R, S	72 000	80 220
	Z	108 000	44 220

CAUTION

- Take particular care during assembly and dismantling work!
- The surfaces must not be damaged under any circumstances!

3.5.2 Electrical data for contact switch

Mechanical contact switch ..K(M)

Coding	..K	..KM(0)
Type	V4NC SET 7 SAIA-Burgess	
Mechanical service life	5 x 10^6	
Electrical service life	12 V, 3 A = 0.05 x 10^6, 100 mA = 3 x 10^6 (cos φ = 1)	
Operating voltage	12 V DC or 24 V DC	
Operating current	max. 5 A	
Male connector	EN 175 301-803	M12x1
Protection class	IP 65 (IEC 60529)	IP 54 (IEC 60529)

NOTICE
For reliable contact, certain minimum flows must not be undershot; I_{min} (12 V DC) = 10 mA, I_{min} (24 V DC) = 100 mA

NOTICE
The specified protection classes only refer to the plug connections and not to the complete valve.

Electrical connection

DIN connector

- Rest position 1-3
  Switching position 1-2

M12 connector

- Rest position 1-_
  Switching position 1-4(3) (contact)
- Rest position 1-4(3) (contact)
  Switching position 1-_

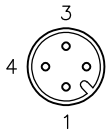

Male connector / Micro switch

.K

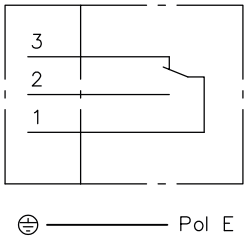

.KM (normally open contact)

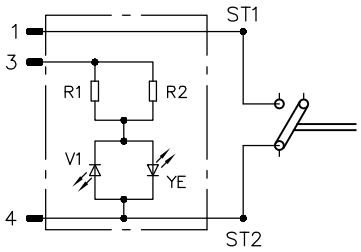

.KMO (normally closed contact)

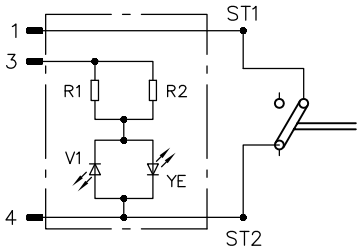

Inductive contact switch ..US(U0), ..UMS(UM0)

Coding	..US(U0)	..UMS(UM0)
Type	Pepperl & Fuchs NBB 1.5-F79-E2	
Operating voltage	24 V DC	
Operating current	0 to 100 mA	
Idle current	≦ 15 mA	
Switching frequency max.	1 Hz	
Switching frequency max.	2000/h	
Male connector	EN 175 301-803	M12x1
Protection class	IP 65 (IEC 60529)	IP 54 (IEC 60529)

NOTICE
The specified protection classes only refer to the plug connections and not to the complete valve.

Electrical connection

DIN connector

- Rest position 1-_
  Switching position 1-2 (contact)
- Rest position 1-2 (contact)
  Switching position 1-_

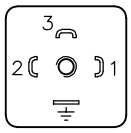

M12 connector

- Rest position 1-_
  Switching position 1-4(3) (contact)
- Rest position 1-4(3) (contact)
  Switching position 1-_

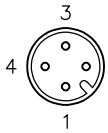

Male connector / Sensor

..US (normally open contact)

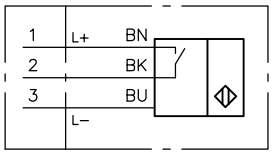

..UMS (normally open contact)

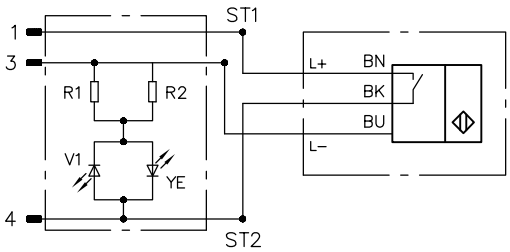

..U0 (normally closed contact)

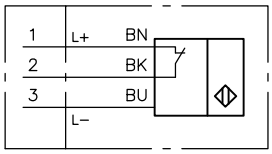

..UM0 (normally closed contact)

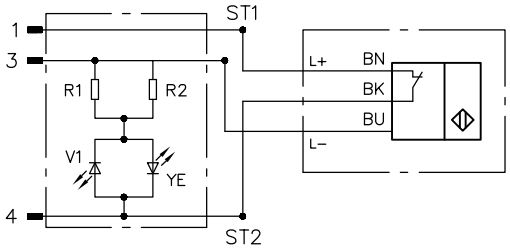

3.6 Alternative actuations

Coding	H 1/4	P	A, CD, KD	T	K
	hydraulic	pneumatic	manual	mechanical	
Permissible residual pressure in the control line for safe return to the neutral position	< 2 bar	--	--	--	--
Z can be statically overloaded up to approx. $p_{contr.\ max}$	x 1.5	x 1.5	--	--	--
Control volume (geometric)	1.4 cm³	9.3 cm³	--	--	--
Housing material and surface treatment	Control head, steel, zinc, nickel-coated	Control head, aluminium, black anodised	Lever housing, steel, zinc, nickel-coated	Control head, steel, zinc, nickel-coated	
External control port	G 1/4	G 1/4	--	--	--
Pilot pressure $p_{contr.\ min}$	24 bar	3.5 bar 5 bar **	--	--	--
Pilot pressure $p_{contr.\ max}$	400 bar	15 bar	--	--	--
Actuation torque	--	--	1.5 to 3 Nm *	--	--
Actuation force	--	--	--	80 to 190 N	22 to 35 N

* with coding KD: Actuation with tool 13 AF

** for circuit symbols Q, W in 400 bar variant

4 Dimensions

All dimensions in mm, subject to change.

4.1 Hole pattern of the base plate

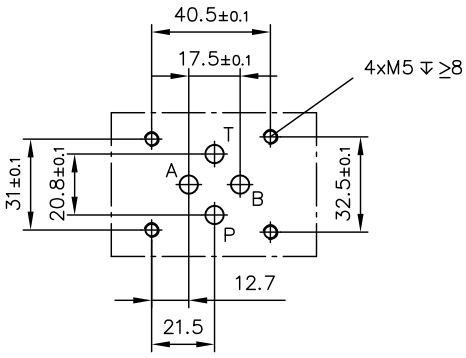

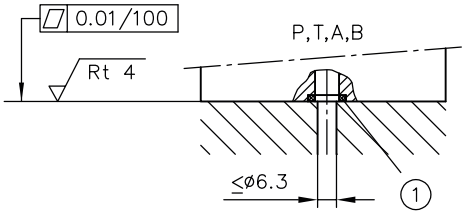

1 O-ring

	Sealing of the ports with O-ring
P, T, A, B	9.25x1.78 NBR 90 Sh

4.2 Valve part

NBVP 16 G (D, DS, J, Q, K, RS, SR, W)

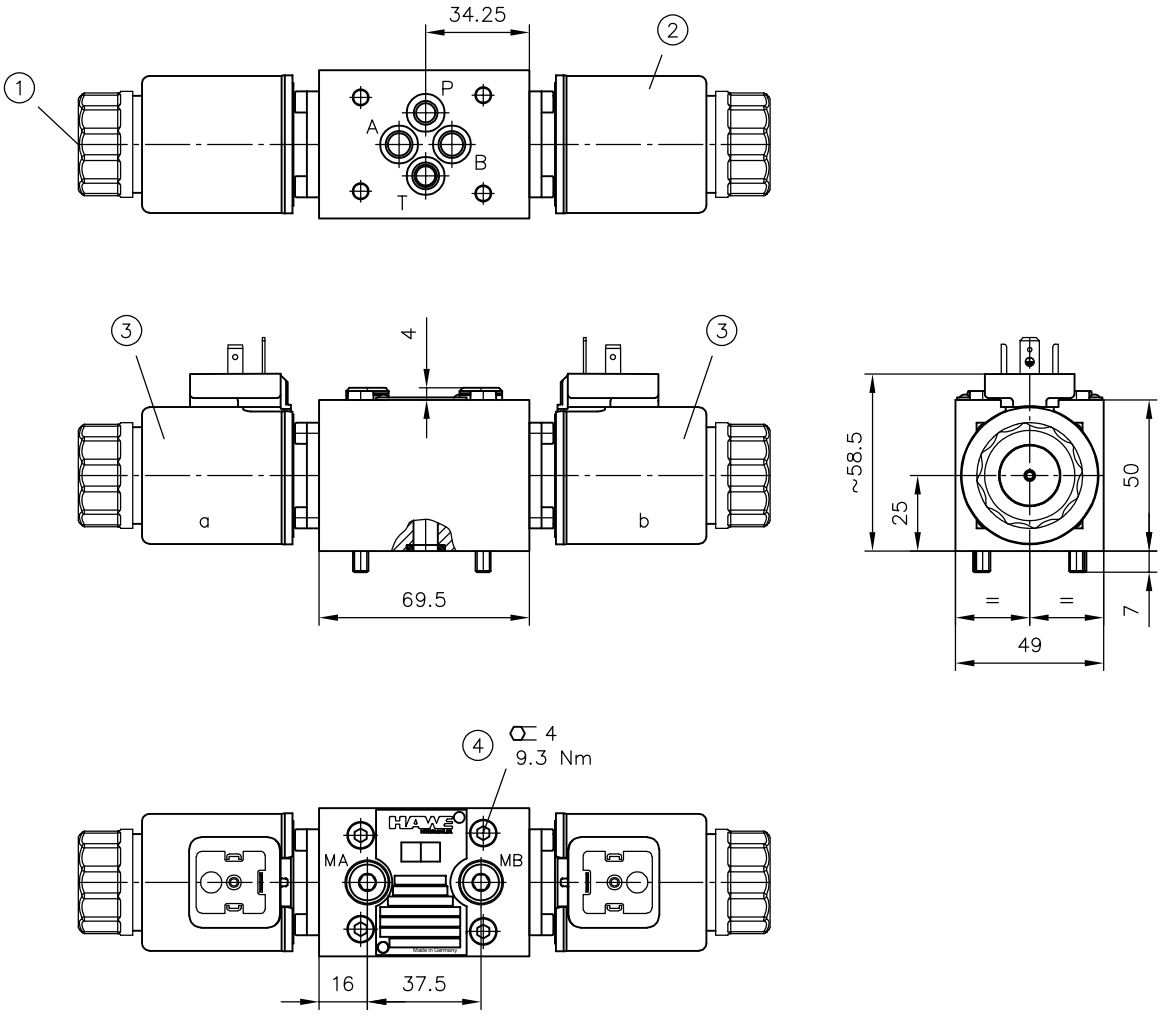

1 Manual actuation
2 Solenoid missing with type Q, K, RS, SR, W
3 Excitation system can be pivoted through 360° (dimensions see Chapter 4.3.1, "Electrical actuations")
4 Cylinder screw ISO 4762-M5x55-12.9

NBVP 16 R (S, B, Z, Y)

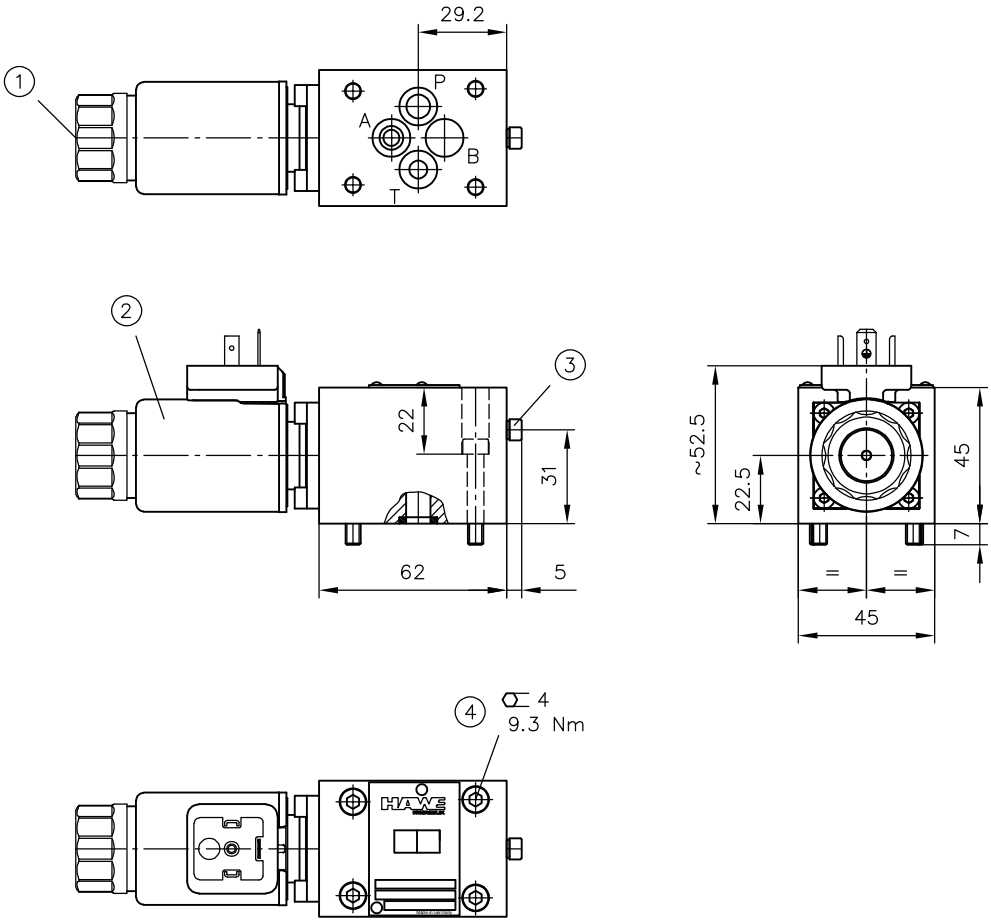

1 Manual actuation
2 Excitation system can be pivoted through 360° (dimensions see Chapter 4.3.1, "Electrical actuations")
3 DG prepared
4 Cylinder screw ISO 4762-M5x30-12.9

NBVP 16 GD

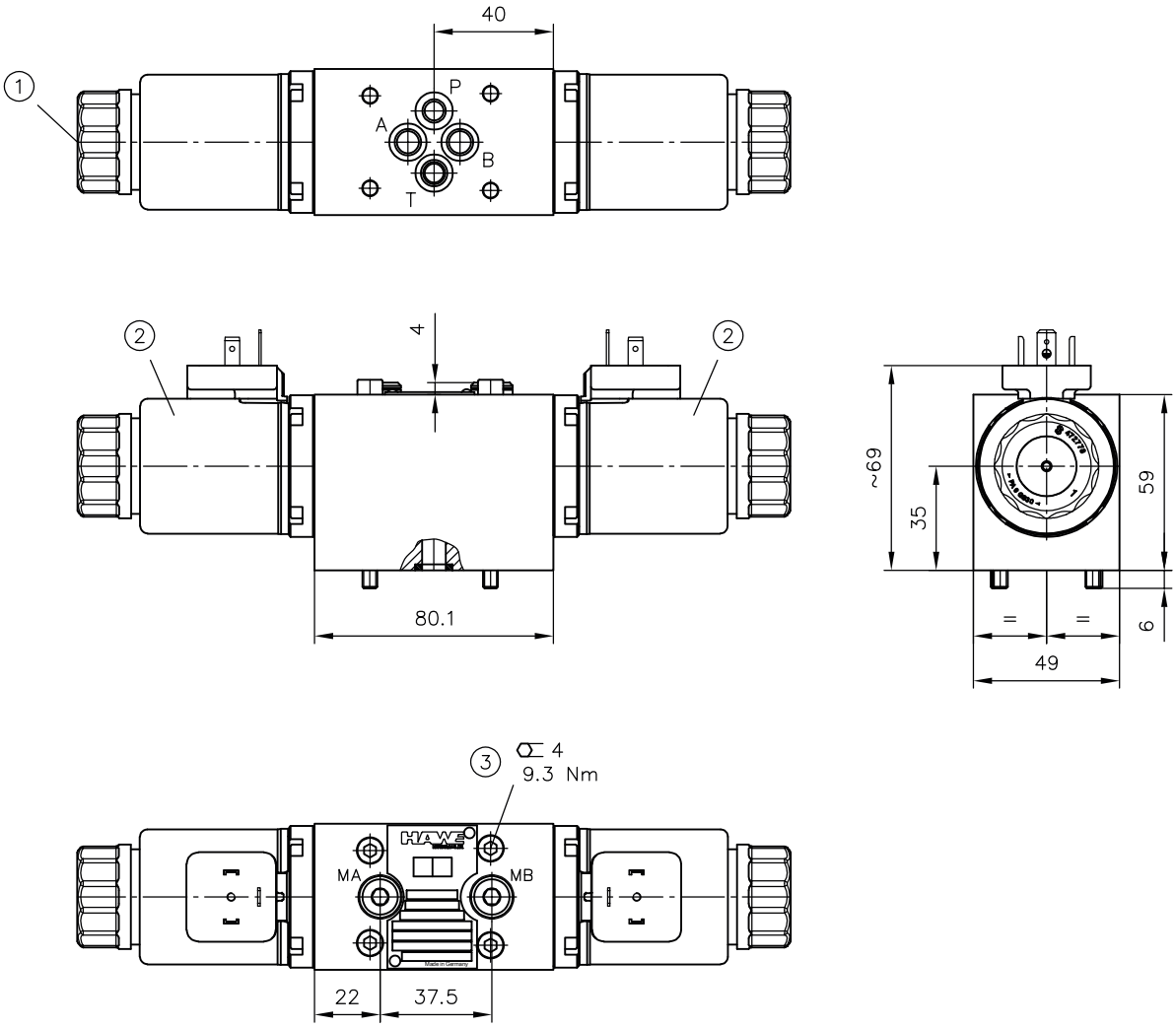

1 Manual actuation

2 Excitation system can be pivoted through 360° (dimensions see Chapter 4.3.1, "Electrical actuations")

3 Cylinder screw ISO 4762-M5x65-12.9

NBVP 16 GH

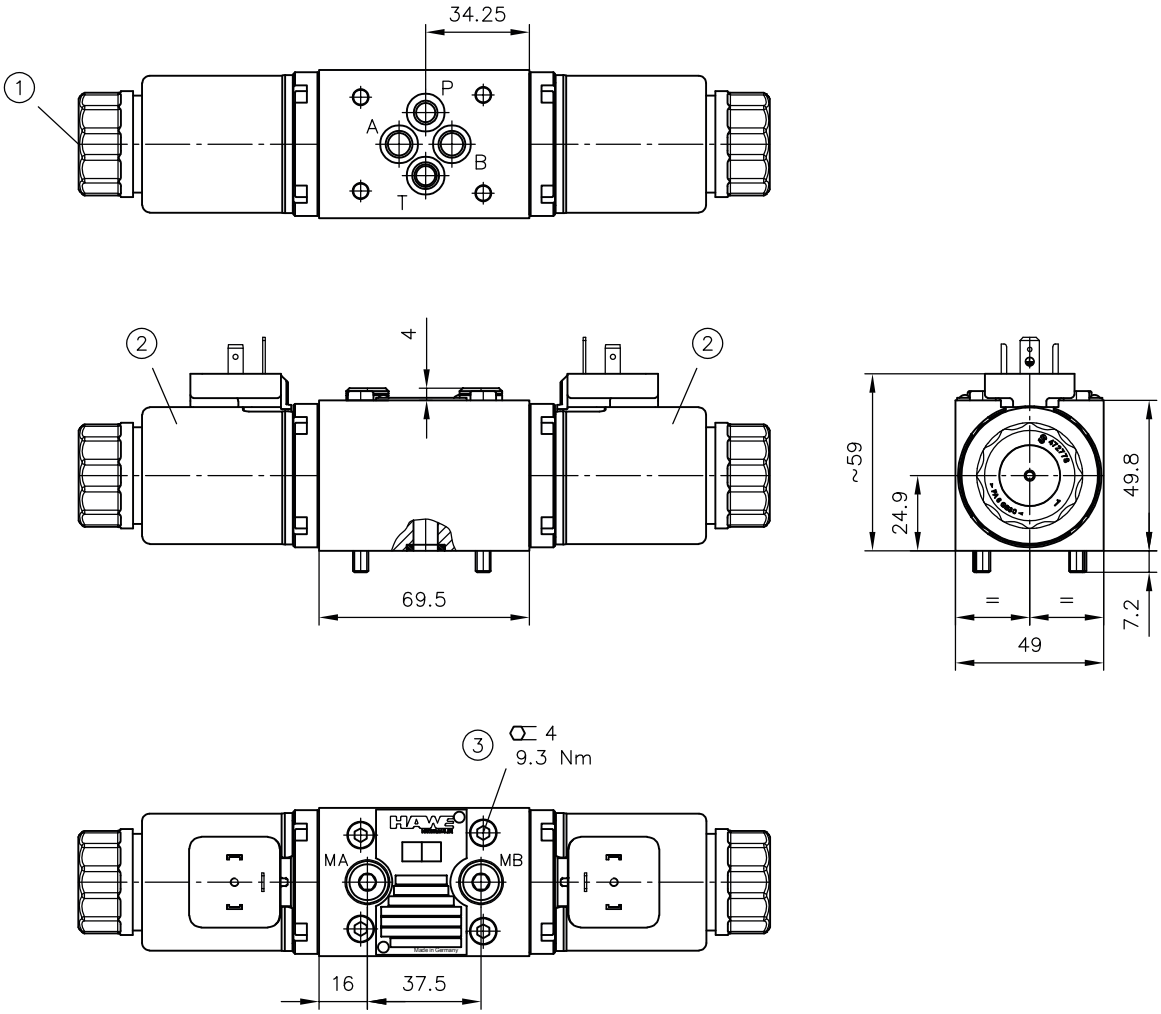

1 Manual actuation

2 Excitation system can be pivoted through 360° (dimensions see Chapter 4.3.1, "Electrical actuations")

3 Cylinder screw ISO 4762-M5x55-12.9

NBVP 16 WD

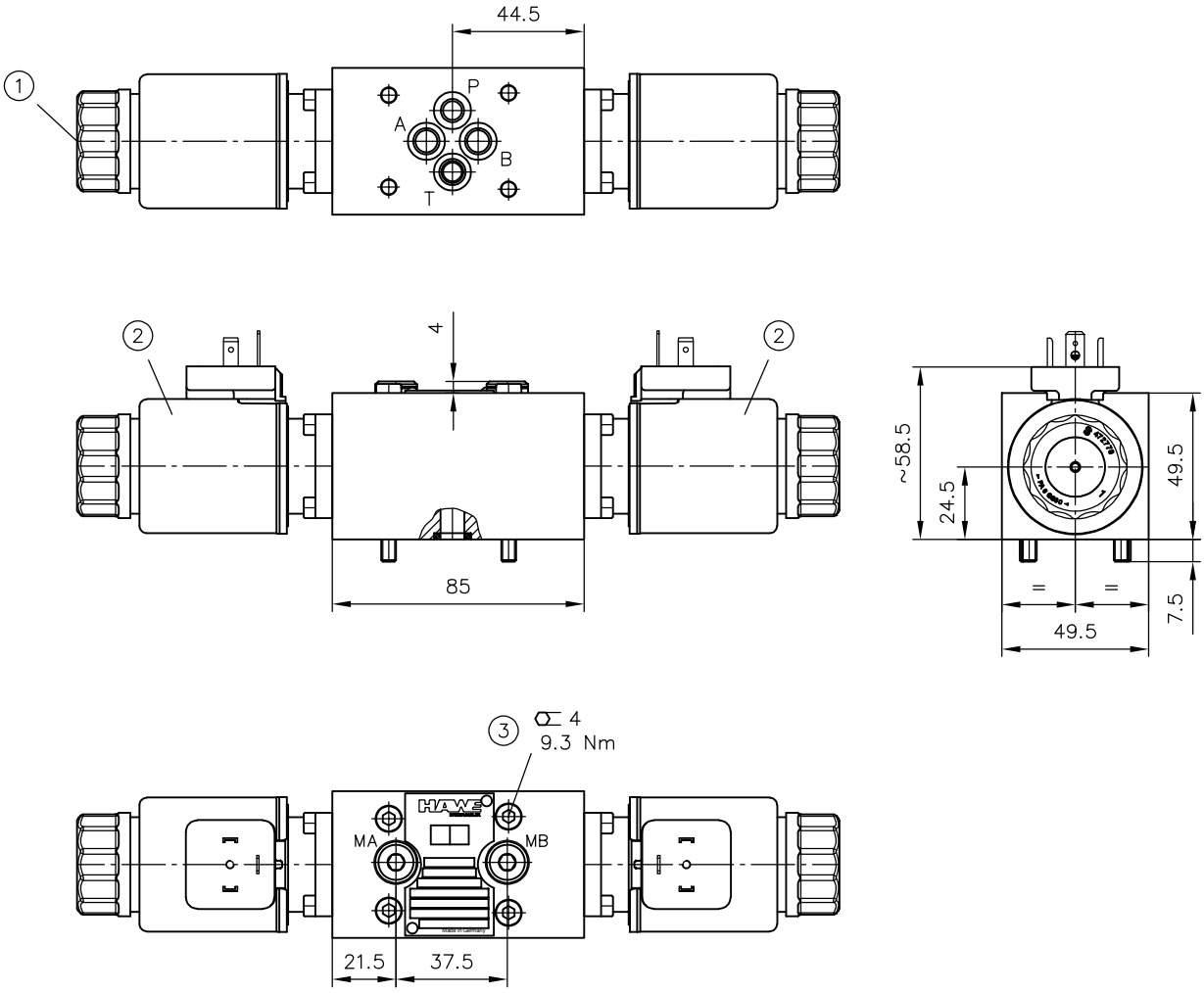

1 Manual actuation

2 Excitation system can be pivoted through 360° (dimensions see Chapter 4.3.1, "Electrical actuations")

3 Cylinder screw ISO 4762-M5x55-12.9

NBVP 16 ZD

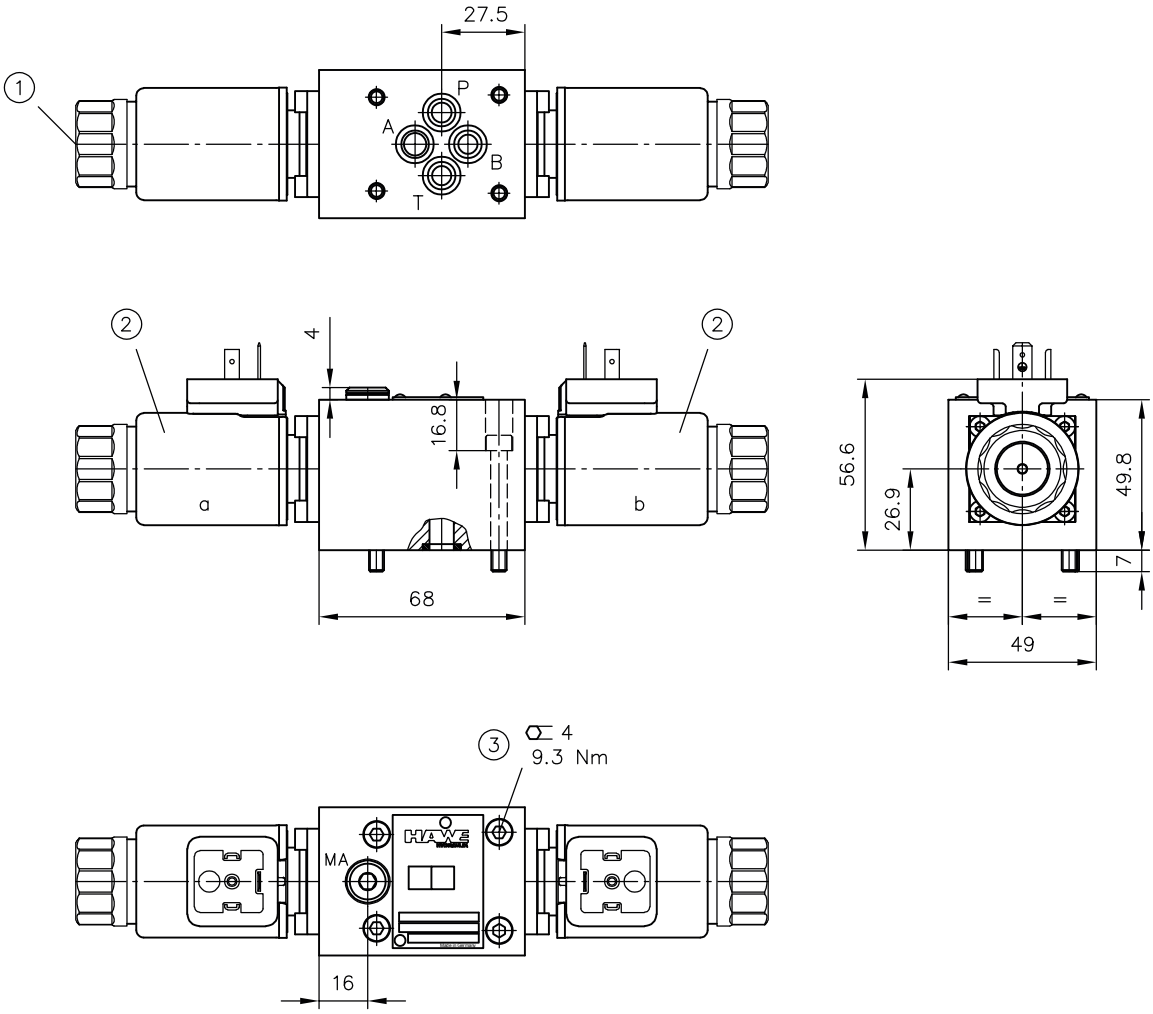

1 Manual actuation

2 Excitation system can be pivoted through 360° (dimensions see Chapter 4.3.1, "Electrical actuations")

3 Cylinder screw ISO 4762-M5x40-12.9

NBVP 16 ZZ (ZY, YZ, YY)

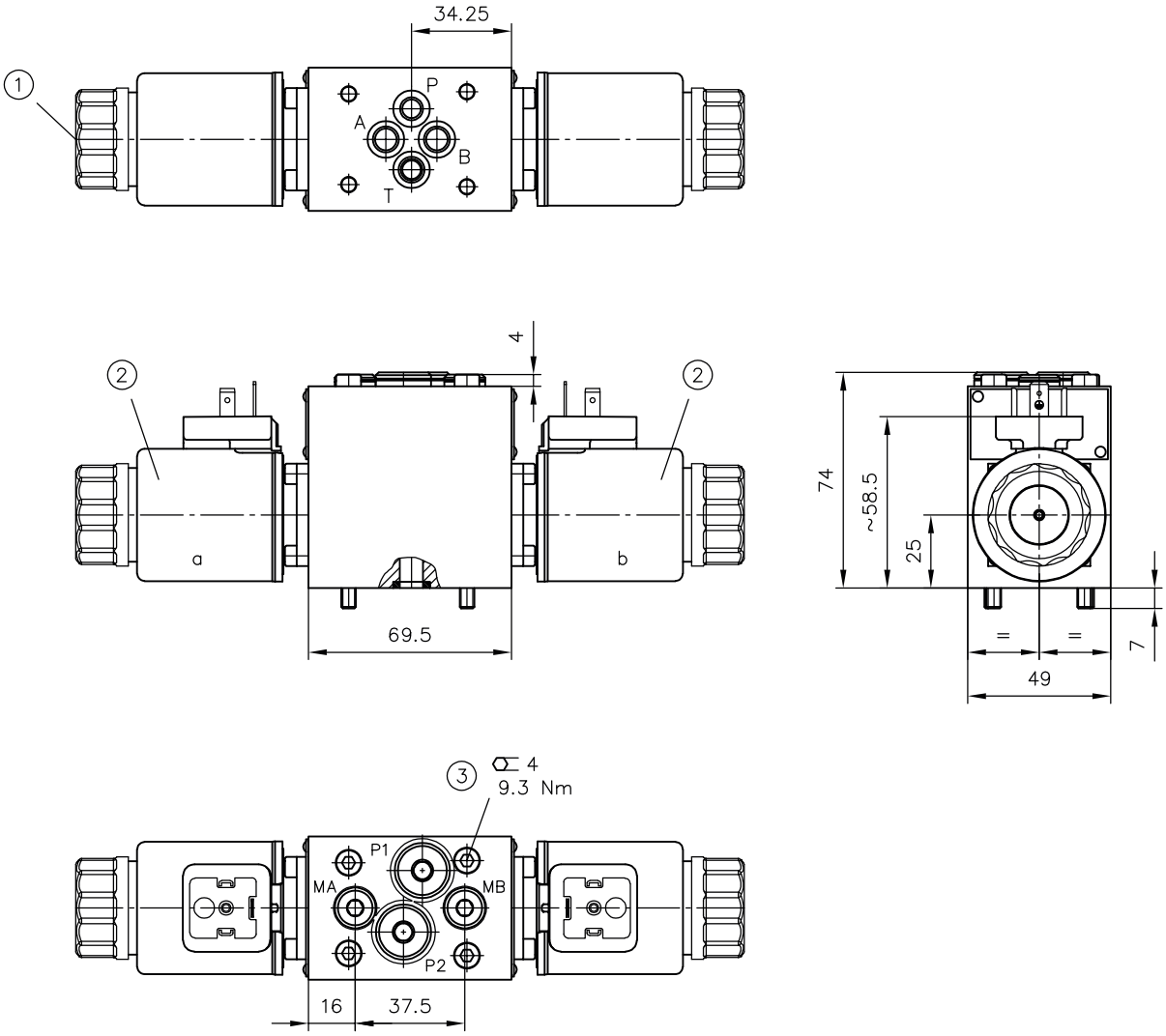

1 Manual actuation

2 Excitation system can be pivoted through 360° (dimensions see Chapter 4.3.1, "Electrical actuations")

3 Cylinder screw ISO 4762-M5x55-12.9

NBVP 16 RK (SK, STK, ZK, YK)
NBVP 16 RKM (SKM, STKM, ZKM, YKM)
NBVP 16 R (S, ST, Z, Y)
NBVP 16 RUS(0)(SUS(0), STUS(0), ZUS(0), YUS(0))
NBVP 16 RUMS(0)(SUMS(0), STUMS(0), ZUMS(0), YUMS(0))

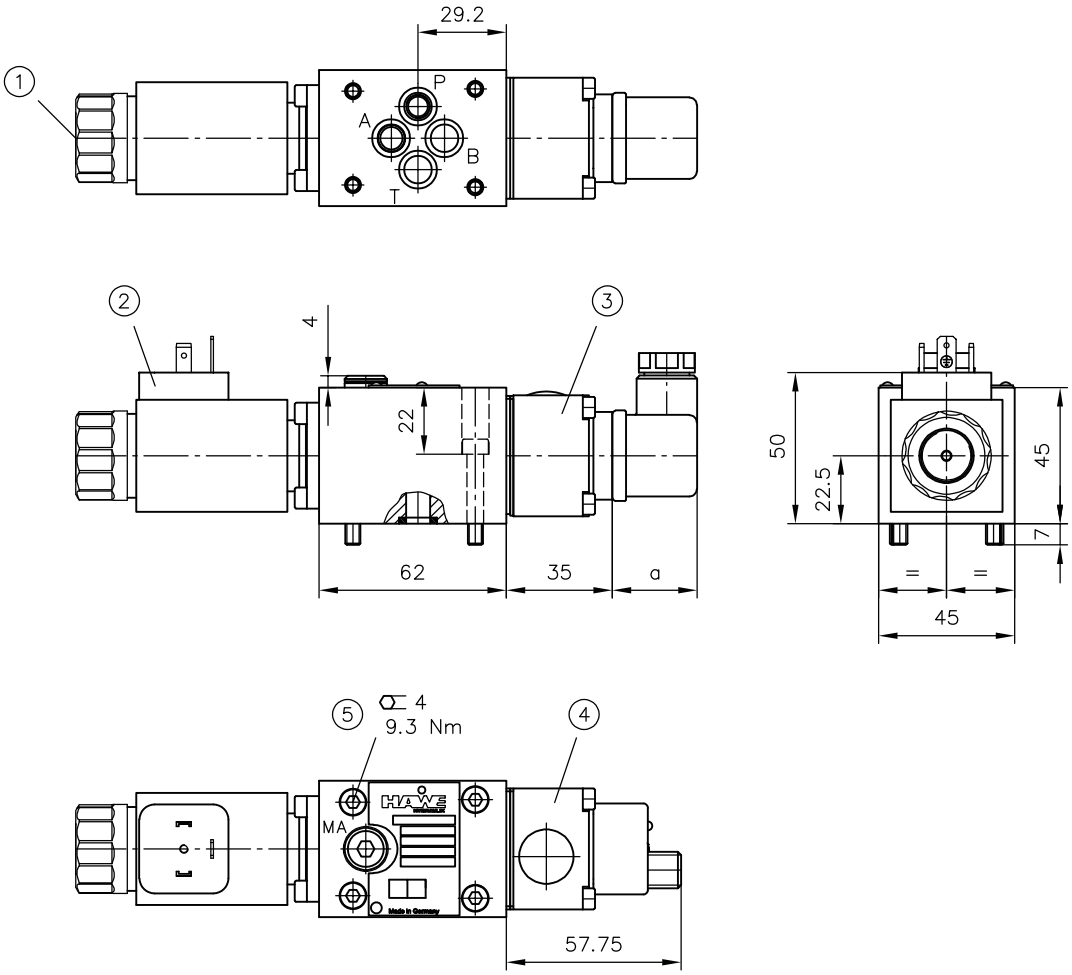

1 Manual actuation
2 Excitation system can be pivoted through 360° (dimensions see Chapter 4.3.1, "Electrical actuations")
3 Male connector type RK (SK, ZK, YK)
Male connector type R (S, ST, Z, Y)
Male connector type RUS(0)(SUS(0), STUS(0), ZUS(0), YUS(0))
4 Male connector type RKM (SKM, ZKM, YKM)
Male connector type R (S, ST, Z, Y) UMS(UM0)
Male connector type NBVP 16 RUMS(0)(SUMS(0), STUMS(0), ZUMS(0), YUMS(0))
5 Cylinder screw ISO 4762-M5x30-12.9

Version	a
G	28
WG	34,5

NBVP 16 ZDK, NBVP 16 ZDK1
NBVP 16 ZDKM, NBVP 16 ZDK1M
NBVP 16 ZDKMO, NBVP 16 ZDK1MO

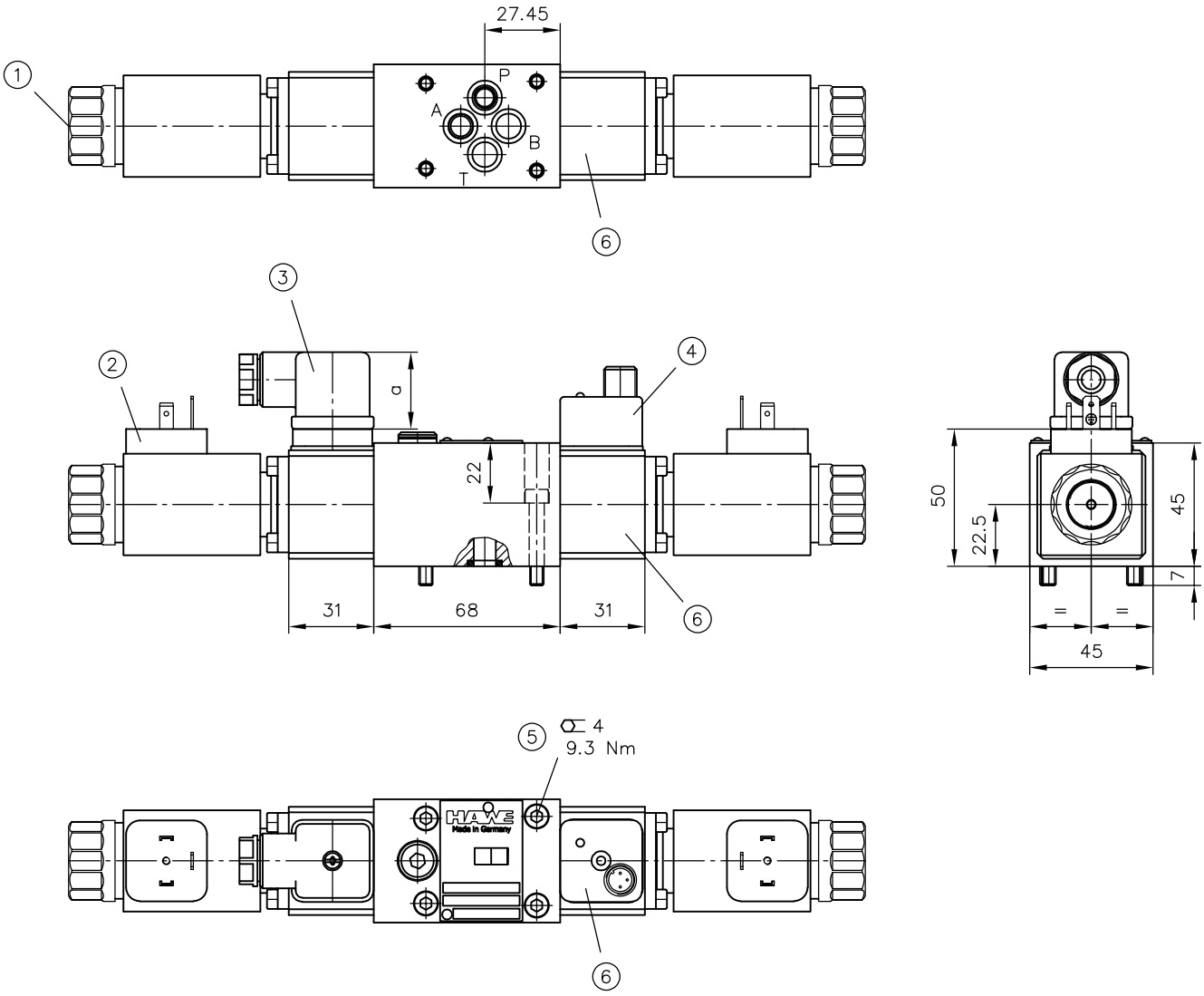

1 Manual actuation
2 Excitation system can be pivoted through 360° (dimensions see Chapter 4.3.1, "Electrical actuations")
3 Male connector type ZDK
4 Male connector type ZDKM
5 Cylinder screw ISO 4762-M5x30-12.9
6 omitted for ZDK 1

Version	a
G	28
WG	34,5

4.3 Actuating elements

4.3.1 Electrical actuations

4.3.1.1 Actuation “dimension diagram A”

Coding **X, G, WG (XM, GM, WGM)**

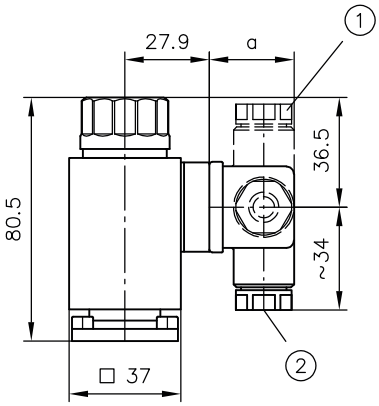

Coding **L**

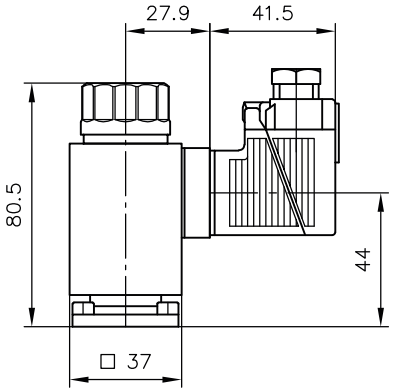

Coding **L5K**

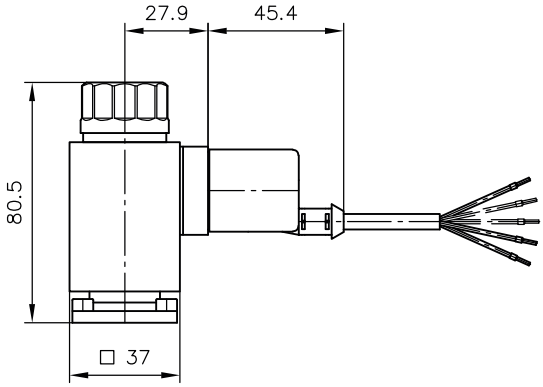

1 Plug can be mounted offset 4x 90°
2 Cable fitting

Version	a
G(M)	28
WG(M)	34.5

Coding **AMP**

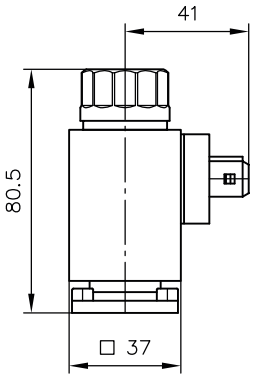

Coding **DT**

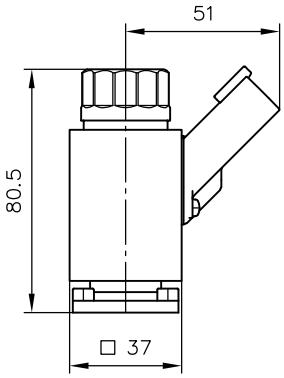

Coding **M 24/8W**

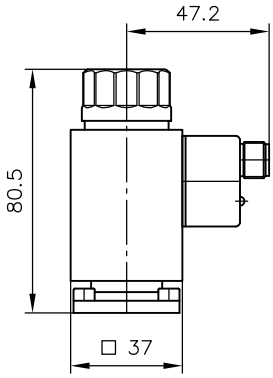

Manual actuation with aid

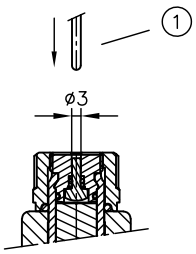

To actuate the valve:

► Use a steel pin or screwdriver etc. to depress the brass bolt (visible on the upper face).

NOTICE
The pressure at the consumer or T port generates a load on the brass bolt acting on the area of ∅ 3 mm; 50 bar approx. 40 N!

1 Auxiliary tool for actuation (do not use parts with sharp edges)

4.3.1.2 Actuation “dimension diagram B”

Coding **XM, GM, WGM**

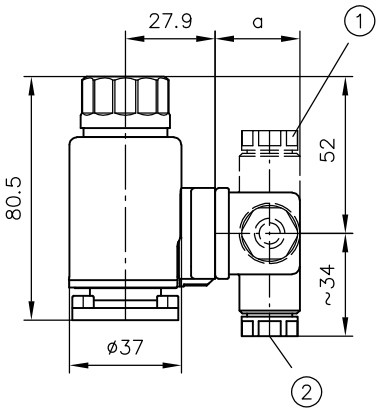

Coding **LM**

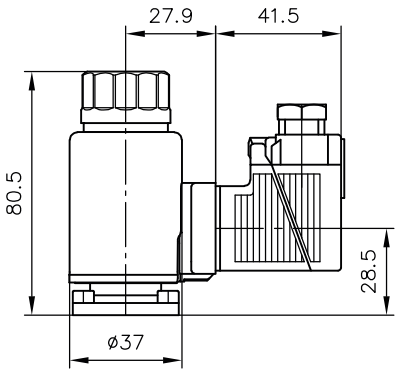

Coding **L5KM**

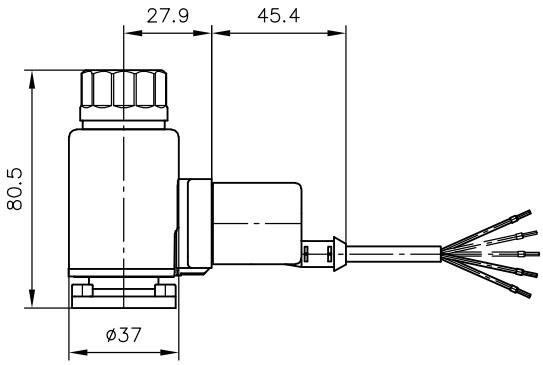

1 Plug can be mounted offset 4x 90°
2 Cable fitting

Version	a
GM	28
WGM	34,5

Coding **AMPM**

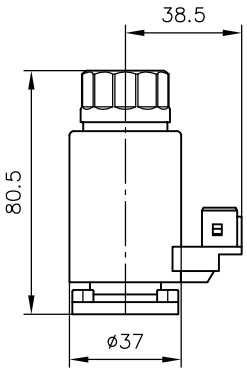

Coding **DTM**

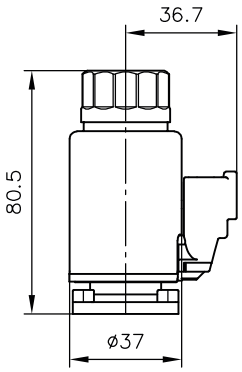

Coding **M**

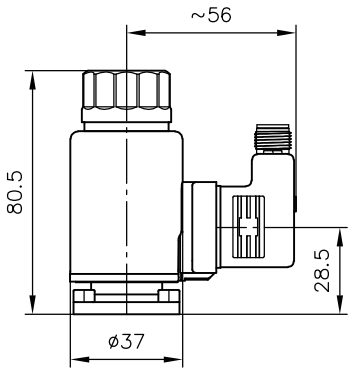

Manual actuation with aid

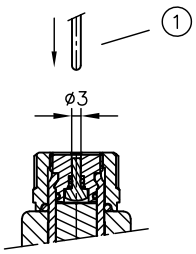

To actuate the valve:

► Use a steel pin or screwdriver etc. to depress the brass bolt (visible on the upper face).

NOTICE
The pressure at the consumer or T port generates a load on the brass bolt acting on the area of ∅ 3 mm; 50 bar approx. 40 N!

1 Auxiliary tool for actuation (do not use parts with sharp edges)

4.3.1.3 Actuation “dimension diagram C”

Coding **X, G, WG, XM, GM, WGM**

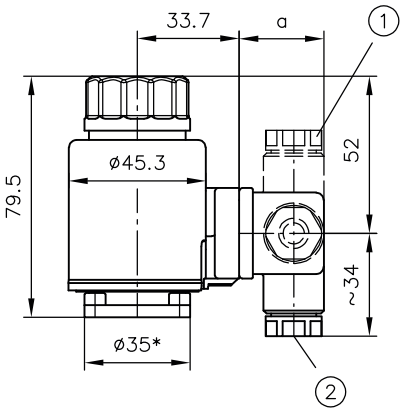

1 Connector can be mounted offset 4x 90°
2 Cable fitting

Coding **L, LM**

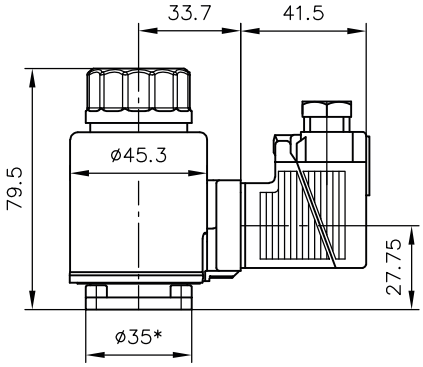

Version	a
G	28
WG	34,5

Coding **L5K, L5KM**

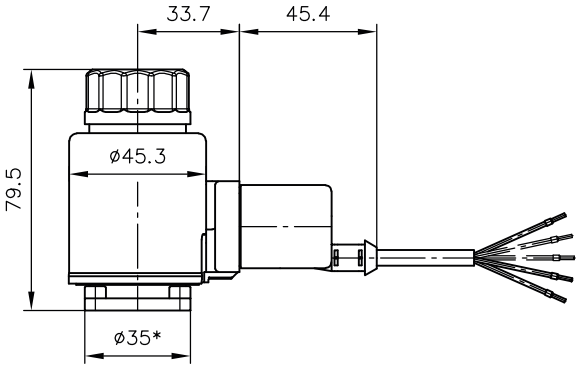

Coding **AMP, AMPM**

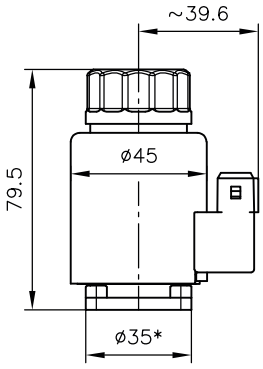

Coding **DT, DTM**

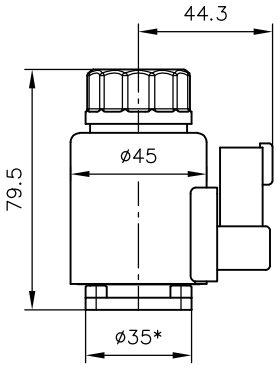

* Symbol GH and GD: ∅ 47.5 mm

Coding **X, G**
for circuit symbol WD

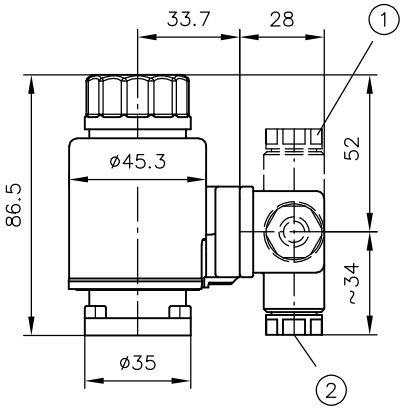

1 Connector can be mounted offset 4x 90°
2 Cable fitting

Coding **M 24/8W**
for circuit symbol WD

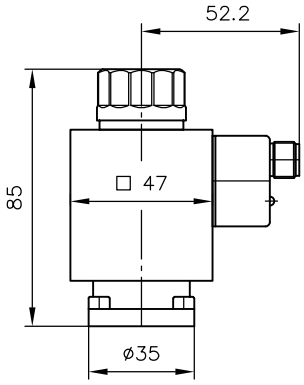

Manual actuation with aid

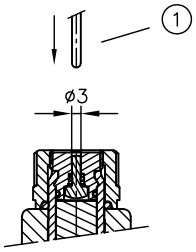

To actuate the valve:

► Use a steel pin or screwdriver etc. to depress the brass bolt (visible on the upper face).

NOTICE
The pressure at the consumer or T port generates a load on the brass bolt acting on the area of ∅ 3 mm; 50 bar approx. 40 N!

1 Auxiliary tool for actuation (do not use parts with sharp edges)

4.3.1.4 Actuation "dimension diagram D"

Coding
X(G) 24/8W
X(G) 24/30W
X(G) 98/30W
X(G) 205/30W

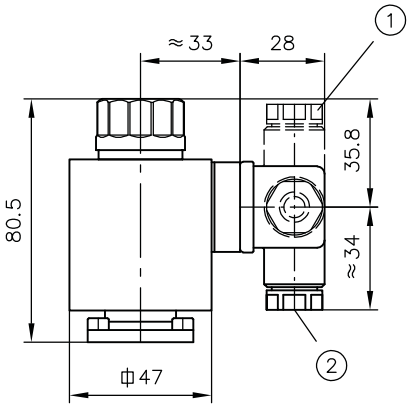

Coding
L 24/8W
L 24/30W
L 98/30W
L 205/30W

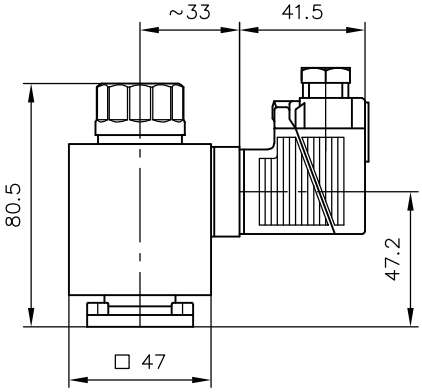

Coding
M 24/8W

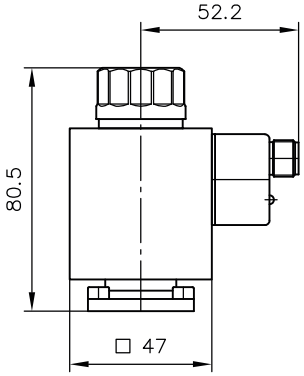

1 Connector can be mounted offset 4x 90°
2 Cable fitting

Manual actuation with aid

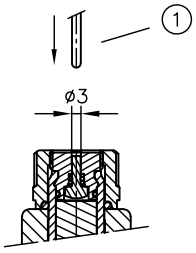

To actuate the valve:

► Use a steel pin or screwdriver etc. to depress the brass bolt (visible on the upper face).

NOTICE
The pressure at the consumer or T port generates a load on the brass bolt acting on the area of ∅ 3 mm; 50 bar approx. 40 N!

1 Auxiliary tool for actuation (do not use parts with sharp edges)

4.3.1.5 Actuation “dimension diagram E”

Coding **X 24 EX 55 FM, X 24 EX M 55 FM**

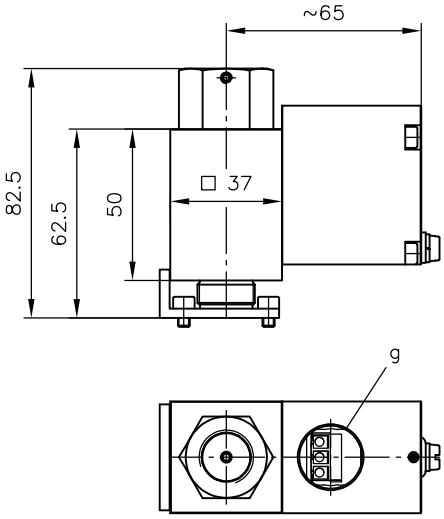

Coding	g
X 24 EX 55 FM	1/2-14 NPT
X 24 EX M 55 FM	M20x10.5-6H

Manual actuation with aid

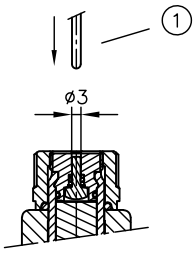

To actuate the valve:

- Use a steel pin or screwdriver etc. to depress the brass bolt (visible on the upper face).

NOTICE
The pressure at the consumer or T port generates a load on the brass bolt acting on the area of ∅ 3 mm; 50 bar approx. 40 N!

1 Auxiliary tool for actuation (do not use parts with sharp edges)

4.3.1.6 Actuation “dimension diagram F”

Coding **X, G, WG**

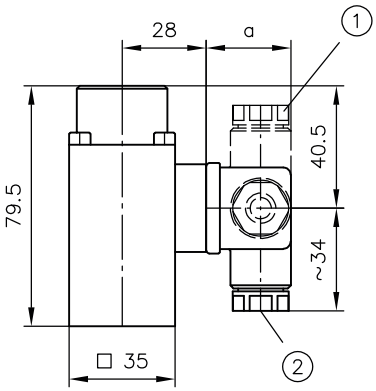

Coding **L**

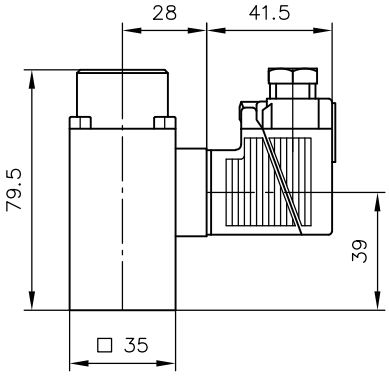

Coding **L5K**

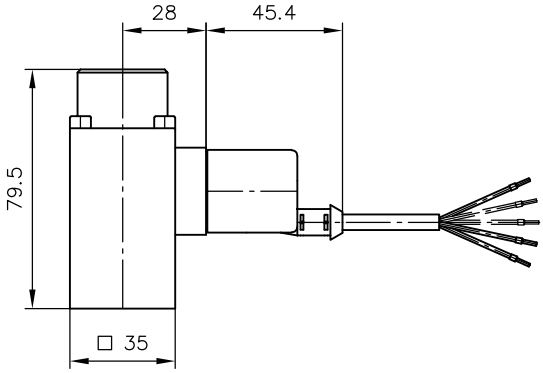

1 Plug can be mounted offset 4x 90°
2 Cable fitting

Version	a
G	28
WG	34,5

Manual actuation with aid

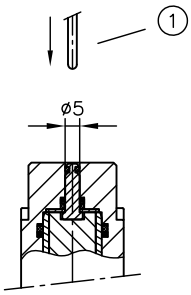

To actuate the valve:

► Use a steel pin or screwdriver etc. to depress the brass bolt (visible on the upper face).

NOTICE
Any pressure at the consumer or T port produces a counterforce that acts on the brass bolt. This bolt has a ∅ 5 mm, i.e. 100 bar ≙ 195 N!

1 Auxiliary tool for actuation (do not use parts with sharp edges)

4.3.1.7 Manual override

- .. T, - .. T1

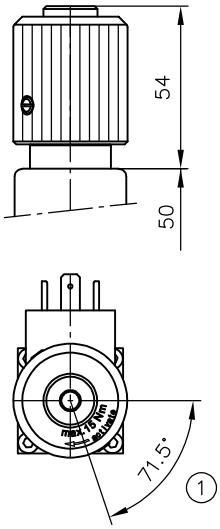

1 Maximum adjustment torque 15 Nm

4.3.2 Alternative actuations

Hydraulic

Coding **H 1/4**

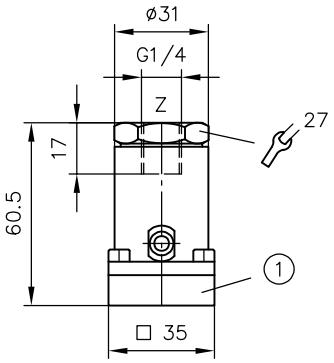

1 additional intermediate section for circuit symbols: Q, K, RS, SR, W, D, DS, J, G

Pneumatic

Coding **P**

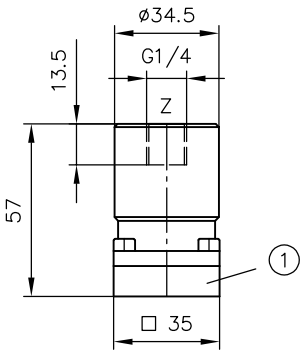

1 additional intermediate section for circuit symbols: Q, K, RS, SR, W, D, DS, J, G

Mechanical, pin

Coding **T**

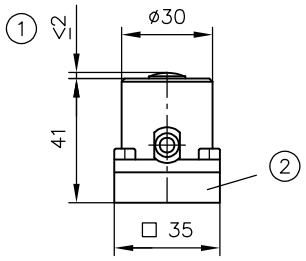

Type	Actuation force F at 100 to 400 bar
NBVP 16 R..-T	80 to 140 N
NBVP 16 S..-T	140 to 190 N
NBVP 16 Z..-T	140 to 190 N

1 Total
2 additional intermediate section for circuit symbols: Q, K, RS, SR, W, D, DS, J, G

Mechanical roller

Coding **K**

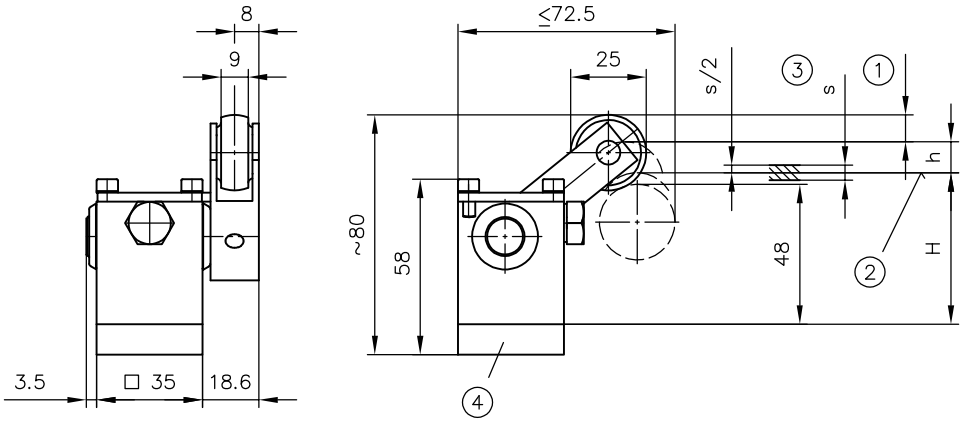

1 Idle stroke
2 Do not use as stop!
3 Safety stroke
4 additional intermediate section for circuit symbols: Q, K, RS, SR, W, D, DS, J, G

Type	Switching travel (mm) at			Actuation force (N)
	Start of function	Functional travel	Switching position range	
	H + h	h	s	
NBVP 16 R..-K	66	14	--	26
NBVP 16 S..-K	66	10	± 1	22
NBVP 16 Z..-K	66	14	± 1	35

Manual with hand lever

Coding **A**

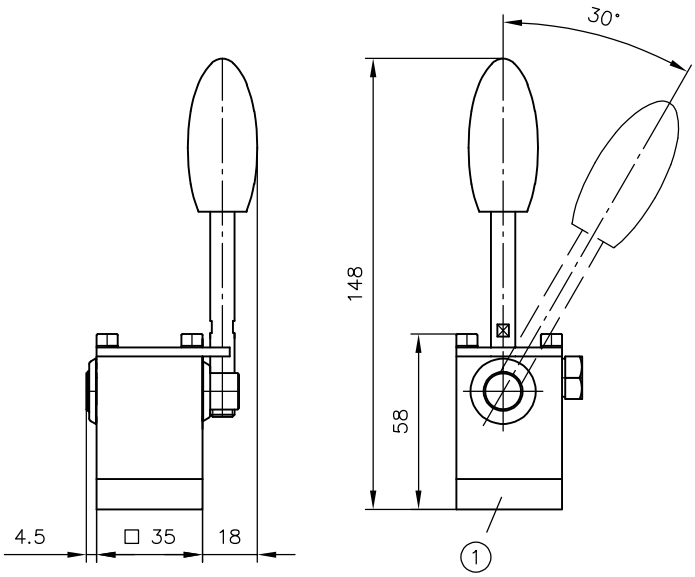

1 additional intermediate section for circuit symbols: Q, K, RS, SR, W, D, DS, J, G

Manual with detent

Coding **CD**

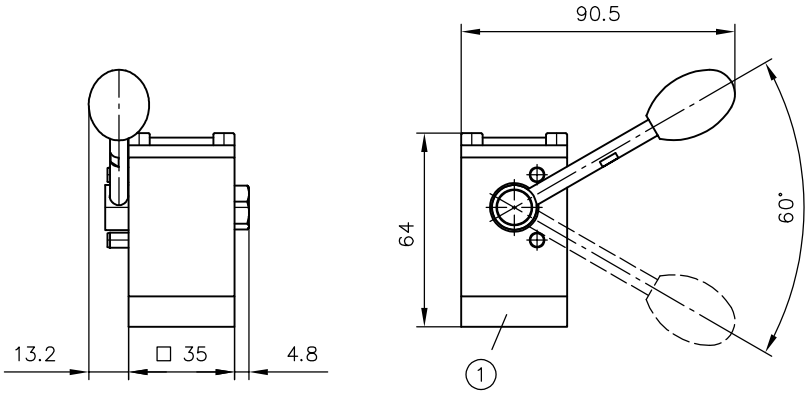

1 additional intermediate section for circuit symbols: Q, K, RS, SR, W, D, DS, J, G

Coding **CD 1(2, 3)**

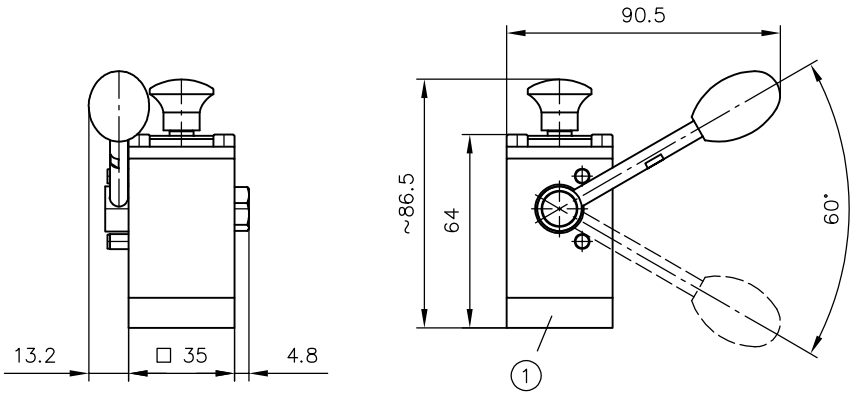

1 additional intermediate section for circuit symbols: Q, K, RS, SR, W, D, DS, J, G

Coding **KD**

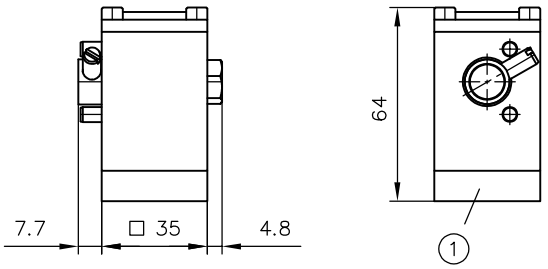

Coding **KD 1(2, 3)**

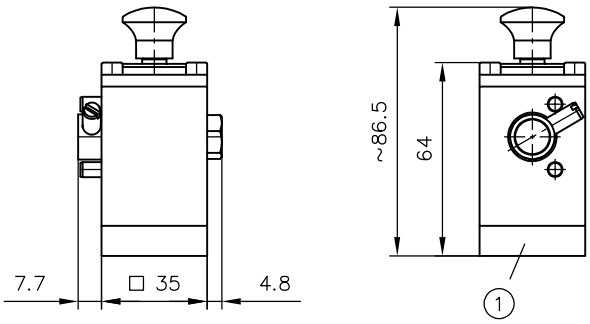

1 additional intermediate section for circuit symbols: Q, K, RS, SR, W, D, DS, J, G

4.4 Pressure switches and pressure gauges

Pressure switch

DG 3

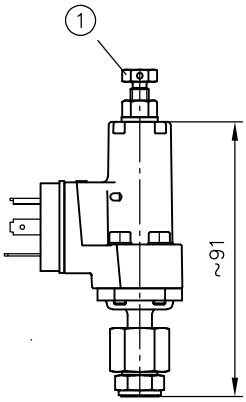

DG 51 E

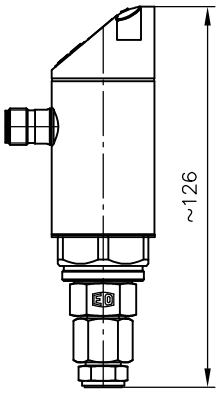

DG 6

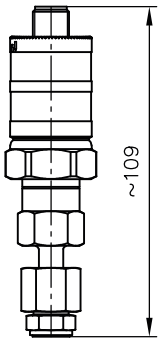

1 Pressure switch adjustment according to D 5440

Pressure gauge

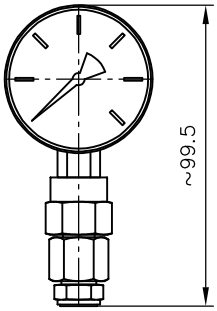

4.5 Contact switch and inductive position monitoring

Dimensions for contact switch and inductive position monitoring identical.

Coding **K** for **RK, SK, ZK, YK, STK, ZDK, ZDK1**
Coding **U** for **RU(0,S), SU(0,S,), ZU(0,S), YU(0,S), ZU(0,S), STU(0,S)**

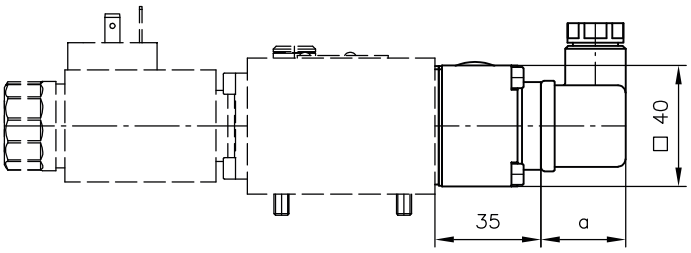

Version	a
G	28
WG	34,5

Coding **KM** for **RKM(0), SKM(0), ZKM(0), YKM(0), STKM(0), ZDK1M(0)**
Coding **UM** for **RUM(0,S), SUM(0,S), ZUM(0,S), YUM(0,S), STUM(0,S)**

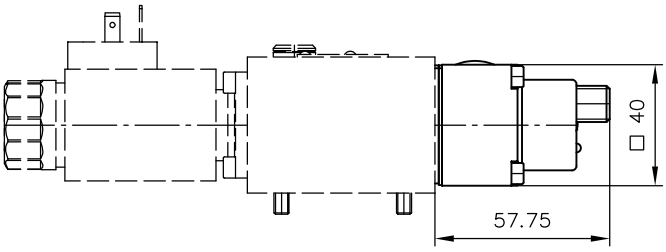

Coding **K** for **ZDK**

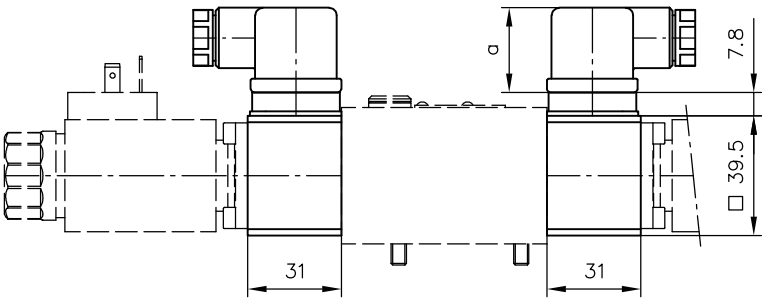

Version	a
G	28
WG	34,5

Coding **KM** for **ZDKM(0)**

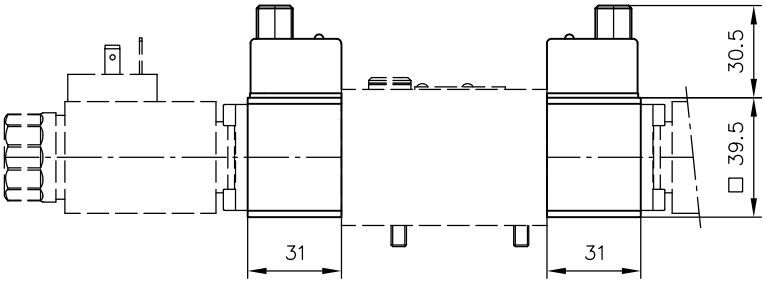

4.6 Single connection block

Coding **-1/4, -3/8**

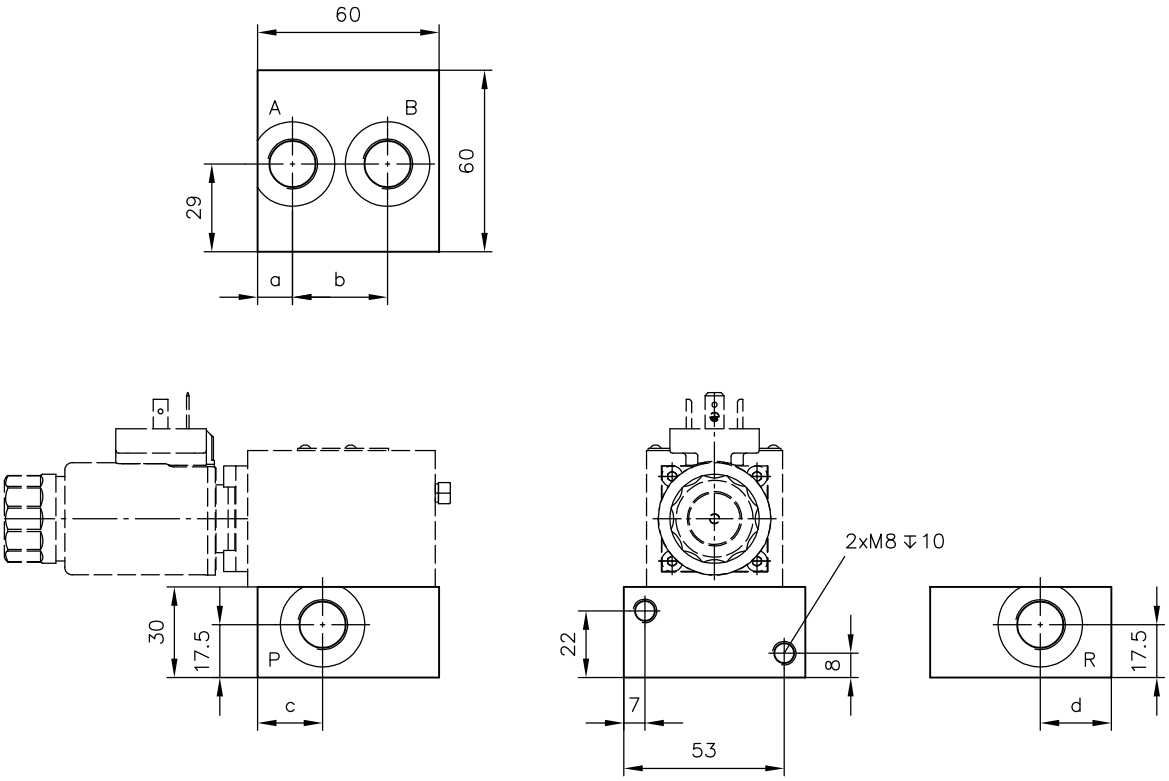

Coding	a	b	c	d	Ports (ISO 228-1)
					P, R, A, B
-1/4	15	28	25	25	G 1/4
-3/8	11,5	31,5	21,5	23,5	G 3/8

5 Installation, operation and maintenance information

Observe the document B 5488 “General operating instructions for assembly, commissioning, and maintenance.”

5.1 Intended use

This product is intended exclusively for hydraulic applications (fluid technology).

The user must observe the safety measures and warnings in this document.

Essential requirements for the product to function correctly and safely:

- All information in this documentation must be observed. This applies in particular to all safety measures and warnings.
- The product must only be assembled and put into operation by specialist personnel.
- The product must only be operated within the specified technical parameters described in detail in this document.
- All components must be suitable for the operating conditions when using an assembly.
- The operating instructions for the components, assemblies and the specific complete system must also always be observed.

If the product can no longer be operated safely:

1. Remove the product from operation and mark it accordingly.
   ✓ It is then not permitted to continue using or operating the product.

5.2 Assembly information

The product must only be installed in the complete system with standard and compliant connection components (screw fittings, hoses, pipes, fixtures etc.).

The product must be shut down correctly prior to disassembly (in particular in combination with hydraulic accumulators).

DANGER

Sudden movement of the hydraulic drives when disassembled incorrectly

Risk of serious injury or death

- Depressurise the hydraulic system.
- Perform safety measures in preparation for maintenance.

5.3 Operating instructions

Observe product configuration and pressure/flow rate.

The statements and technical parameters in this document must be strictly observed.
The instructions for the complete technical system must also always be followed.

NOTICE

- Read the documentation carefully before usage.
- The documentation must be accessible to the operating and maintenance staff at all times.
- Keep documentation up to date after every addition or update.

CAUTION

Overloading components due to incorrect pressure settings.

Minor injuries. Flyaway or bursting parts and uncontrolled leakage of hydraulic fluid.

- Pay attention to the maximum operating pressure of the pump, valves and fittings.
- Always monitor the pressure gauge when setting and changing the pressure.

Purity and filtering of the hydraulic fluid

Fine contamination can significantly impair the function of the product. Contamination can cause irreparable damage.

Examples of fine contamination include:

- Swarf
- Rubber particles from hoses and seals
- Dirt due to assembly and maintenance
- Mechanical debris
- Chemical ageing of the hydraulic fluid

NOTICE

New hydraulic fluid from the manufacturer may not have the required purity.

Damage to the product is possible.

- ► Filter new hydraulic fluid to a high quality when filling.
- ► Do not mix hydraulic fluids. Always use hydraulic fluid that is from the same manufacturer, of the same type, and with the same viscosity properties.

For smooth operation, pay attention to the cleanliness level of the hydraulic fluid (cleanliness level see Chapter 3, "Parameters").

Additionally applicable document: D 5488/1 oil recommendations

5.4 Maintenance information

Check regularly (at least once a year) by visual inspection whether the hydraulic connections are damaged. If external leakages are found, shut down and repair the system.

Clean the surface of the device regularly (at least once a year) (dust deposits and dirt).

6 Other information

6.1 Accessories, spare and individual parts

To purchase spare parts, please see HAWE Hydraulik interactive contact map.

Coding	Spare part number	Publication or part number
B..	Grub screw ISO 4026 - M8x8 - ... - 10 Diameter	--
R	ER 13	7325 000 K
S S 0.2 S 1	ER 14 ER 14/0.2 ER 14/1	Sk 7966 200
ABV.. BBV.. ABR.. BBR..	EBR 14 - B ... Diameter	Sk 7966 300
AB.. BB..	(undrilled) (∅ 0.4) (∅ 0.5) (∅ 0.6) (∅ 0.7) (∅ 0.8) (∅ 0.9) (∅ 1.0) (∅ 1.2) (∅ 1.5) (∅ 2.0) (∅ 2.5)	7966 003 m 7966 003 i 7966 003 k 7966 003 l 7966 003 a 7966 003 n 7966 003 f 7966 003 b 7966 003 g 7966 003 c 7966 003 d 7966 003 e

References

Additional versions

- Directional seated valve type BVE: D 7921
- Valve bank (nominal size 6) type BA: D 7788
- Intermediate plate type NZP: D 7788 Z
- Valve bank (directional seated valve) type BVH: D 7788 BV

D 7765 N 05-2026-1.3

HAWE Hydraulik SE
Einsteinring 17 | 85609 Aschheim/Munich | P.O. Box 11 55 | 85605 Aschheim | Germany
Phone +49 89 379100-1000 | info@hawe.de | www.hawe.com

hawe.com/contact